BETA MARINE

Installation Guide & Operators Manual

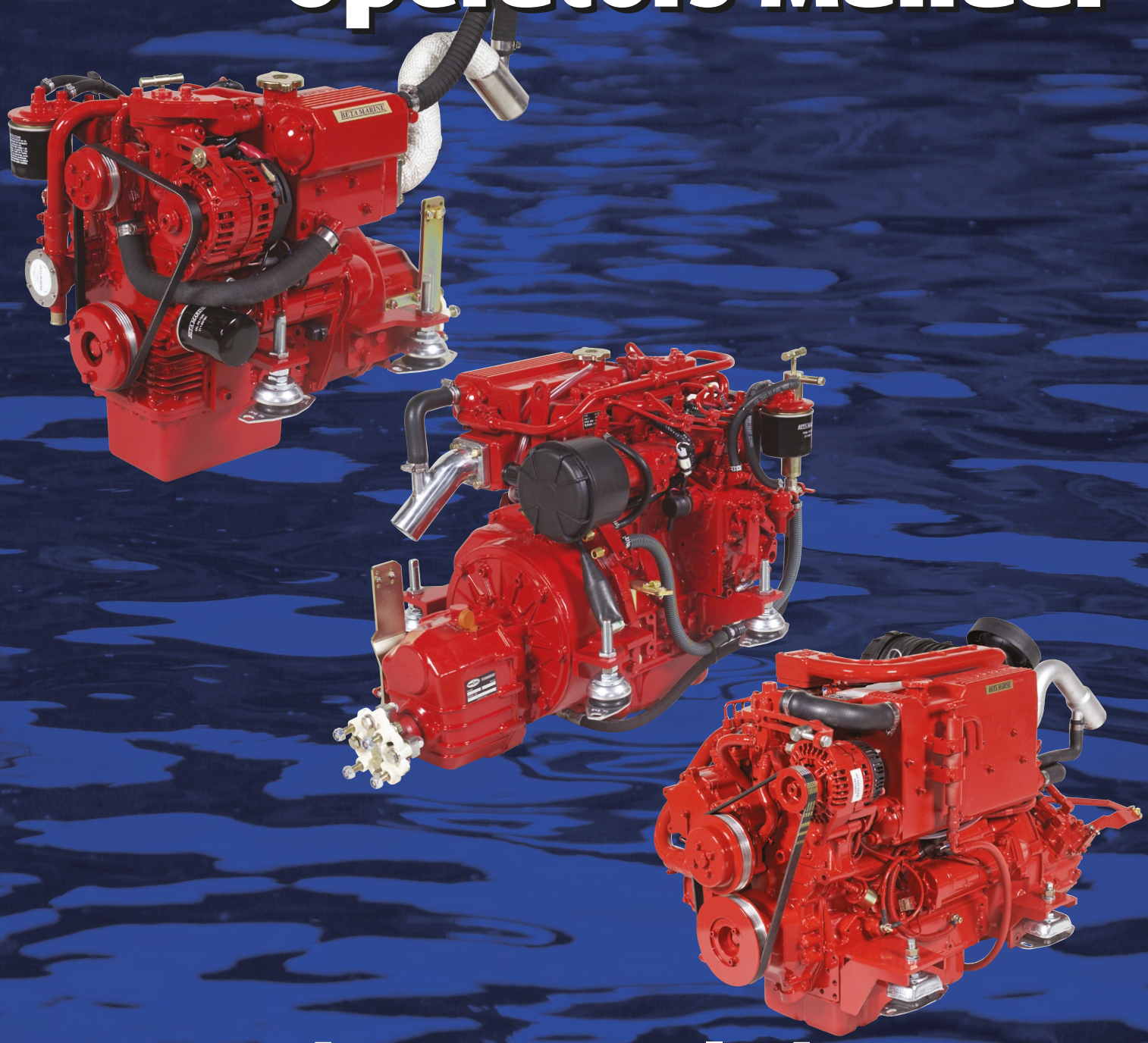

Heat Exchanger Cooled:

Beta 10 to Beta 115T

CALIFORNIA - Proposition 65 Warning: Diesel engine exhaust and some of its constituents are known to the state of California to cause cancer, birth defects and other reproductive harm.

Typical Heat Exchanger Cooling System

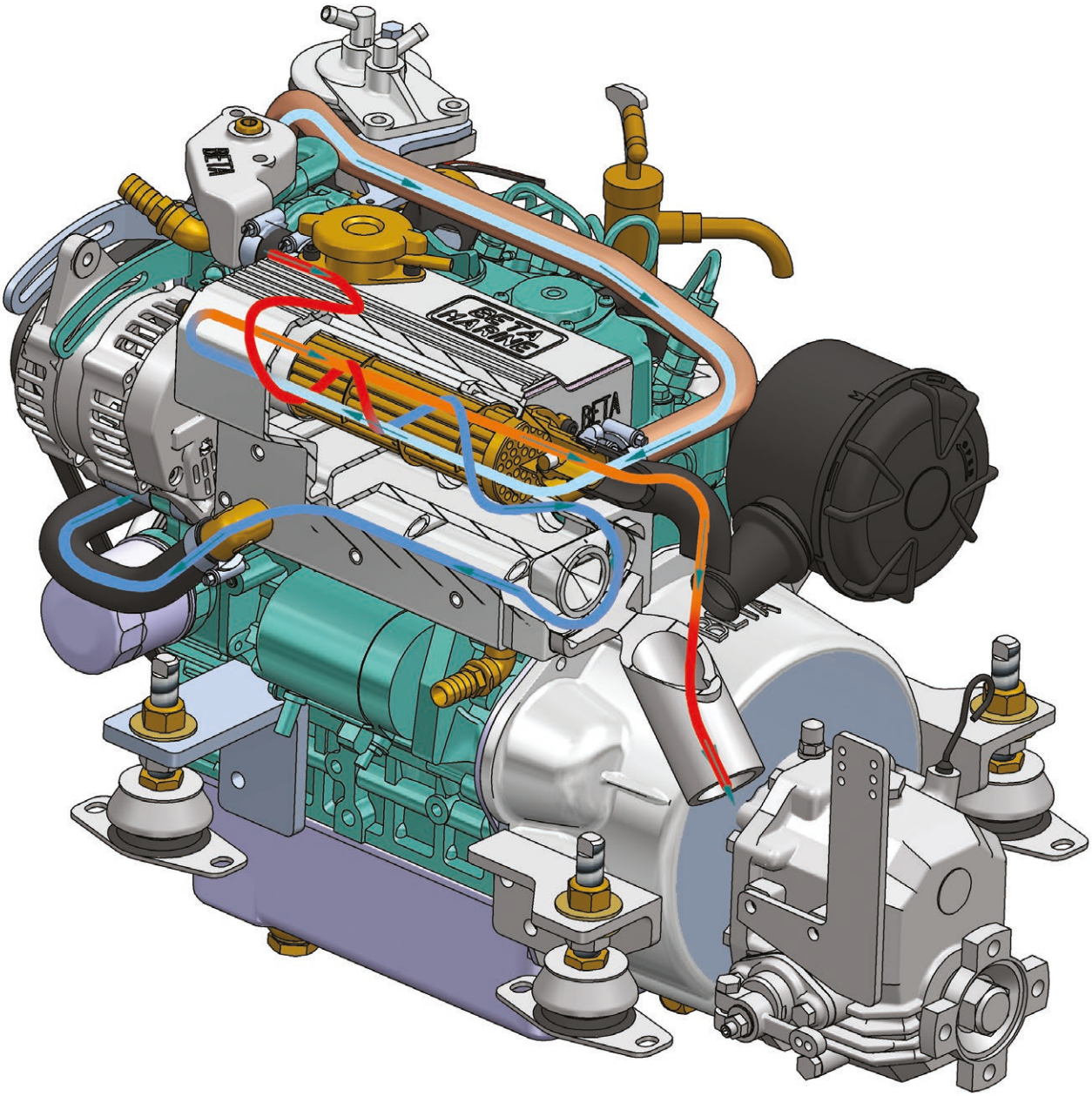

Images Are For Illustration Purposes
& Not Necessarily Representative

Engine Identification

IMPORTANT! To ensure you receive the correct advice or parts we ask you to always provide the WOC (Works Order Card) number and/or the engine serial number. Please refer to page 4.

Engine Type:	Power: bhp	Speed: rpm
BETA WOC NO:	**K**	
Gearbox Type:		Reduction Ratio:
Purchased From:		
Invoice Number:		
Date Commissioned:		
Specification/Special Details:		

Contents

INTRODUCTION	**3**
Engine Identification	4
Initial Receipt of the Engine	5
Engine Set Storage	5
Safety Precautions	6
Technical Specifications	7
SECTION 1: INSTALLATION GUIDELINES	**18**
Ventilation	18
Mounting	19
Alignment	21
Flexible Couplings	22
Heat Exchanger Cooling - Wet Exhaust	23
Heat Exchanger Cooling - Seawater Inlet System	27
Fuel System - Fuel/Water Separator, Fuel Lift Pump, Fuel Filter	30
Fuel System - Fuel Supply & Leak Off	31
Cooling - Calorifier Connections	32
Cooling - Engine Coolant	33
Batteries and Cables	36
Lubrication - Engine Lubrication	39
Bleeding the Fuel System	40
Control Panels - Overview	42
Control Panels - Installation	45
SECTION 2: INITIAL ENGINE START UP	**46**
Initial Start-Up	46
Normal Starting and Stopping	47
Emergency Stopping	49
SECTION 3: MAINTENANCE AND SERVICE GUIDELINES	**50**
Maintenance Schedule	51
Checking and Changing Engine Oil	53
Checking Crank Case Breather	54
Checking and Changing Gearbox Oil	55
Fuel Filter Replacement	56
Seawater Pump and Cooling System	57
Tube Stack and 'Wasting Zinc Anode'	58
Belt Tensioning Adjustment	59
Air Filter Inspection/Replacement	60
Electrical Maintenance	61
Laying Up and Winterising	61
SECTION 4: TROUBLE SHOOTING	**62**
SECTION 5: DIAGRAM INDEX	**73**
SECTION 6: EMISSIONS	**118**
Exhaust Emission - RCD2 Declaration of Conformity	118
Exhaust Emission - RCD2 Durability	120
Exhaust Emission - EPA Durability	121
Hazardous Materials Statement	124
SECTION 7: CONSUMABLE SERVICE PARTS	**126**
SECTION 8: SERVICE RECORD	**132**

OPERATION AND MAINTENANCE MANUAL FOR THE FOLLOWING BETA MARINE KUBOTA BASED ENGINES

Beta 10 to Beta 115T Heat Exchanger Propulsion Engines

WELCOME TO BETA MARINE

Thank you for purchasing a Beta Marine Engine. We have produced this manual to provide you with important information and recommendations to ensure the most trouble free and economical operation of the engine possible.

As manufacturers, we have written this "Operators Maintenance Manual" from a technical viewpoint assuming a certain amount of understanding of marine engineering. We wish to help you, so if you do not fully understand any phrase or terminology or require any explanations please contact Beta Marine Limited or its distributors and we will be pleased to provide further advice or technical assistance.

All information and recommendations given in this publication are based on the latest information available at the time of publication, and are subject to alteration at any time.

The information given is subject to the company's current conditions of Tender and Sale, is for the assistance of users, and is based upon results obtained from tests carried out at the place of manufacture and in vessels used for development purposes. We do not guarantee the same results will be obtained elsewhere under different conditions.

FREQUENTLY USED TOOLS

Useful tools when working on Beta 10 to Beta 115T engines are:

Sockets and/or spanners in sizes:

10, 12, 13, 14, 17, 19, 22 & 24mm

Allen key in sizes:

5, 6, 8 & 10mm

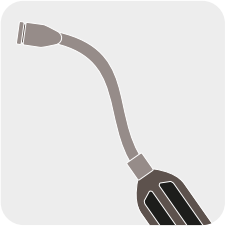

When working on jubilee clips on hoses in restricted or awkward positions a **7mm flex-drive socket** is highly recommended.

ENGINE IDENTIFICATION

⚠ IMPORTANT! - To ensure you receive the correct advice or parts we ask you to always provide the WOC (Works Order Card) number and/or the engine serial number

The engine specification label is located on the engine rocker cover, it details the WOC number, engine type, engine serial number and output in bhp.

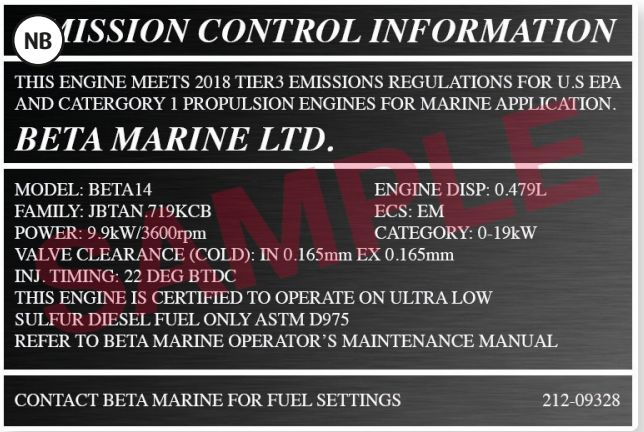

NB: Engines destined for the USA will additionally have been registered for EPA Tier III compliance and carry this additional label on the engine rocker cover.

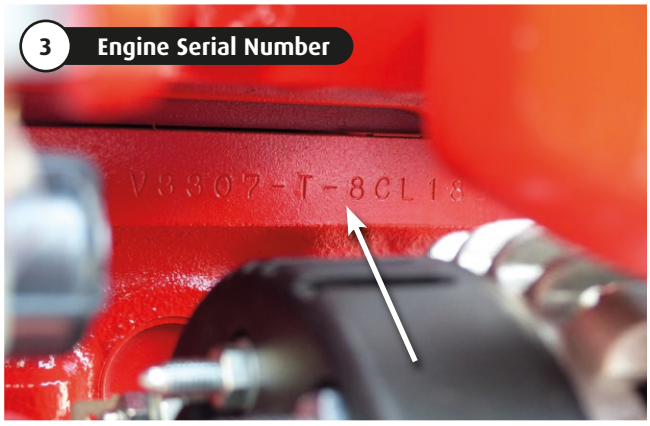

The engine serial number is additionally stamped on the engine casing in the locations listed below.

Beta 10, 14, 16, 20 & 25
Forward end, starboard side, under the speed lever when viewed form the gearbox end.

Beta 30, 35, 38 & 45T
Aft end, port side under the heat exchanger when viewed from the gearbox end.

Beta 43, 50, & 60
Forward end, starboard side, under the speed lever when viewed form the gearbox end.

Beta 70T & 85T
Forward end, starboard side, under the starter battery alternator when viewed form the gearbox end.

Beta 75, 90, 90T, 105T & 115T
Aft end, starboard side under the fuel filter when viewed from the gearbox end.

INITIAL RECEIPT OF THE ENGINE

A full inspection of the engine must be made **immediately on delivery** to confirm that there is no damage. If there is any damage then write this clearly on the delivery note and inform your dealer or Beta Marine by the next working day. It would be appreciated for any claims to be supported by relevant photographs.

ENGINE STORAGE

The engine must be stored in a dry, frost free area and this is best done in its packing case. If storage is to be more than six months then the engine must be inhibited (contact your dealer or Beta Marine). Failure to inhibit the engine may result in the formation of rust in the injection system and the engine bores, this could invalidate the warranty.

⚠ Safety Precautions!

A Keep the engine, gearbox and surrounding area clean, including the area immediately below the engine.

B Drives - Power Take Off Areas

i) Gearbox Output Flange

The purpose of a marine diesel propulsion engine is to provide motive power to propel a vessel. Accordingly the gearbox output shaft rotates at between 280 and 2400 rev/min. This flange is designed to be coupled to a propeller shaft by the installer and steps must be taken to ensure adequate guarding.

ii) Forward End Drive

Engines are supplied with unguarded belt drives to power the fresh water pump and battery charging alternator. The installer must ensure that it is not possible for injury to occur by allowing access to this area of the engine. The three pulleys run at high speed and can cause injury if personnel or clothing come in contact with the belts or pulleys, when the engine is running.

iii) Power Take Off Shaft (Engine Mounted Option)

Shaft extensions are available as an option and rotate at between 850 and 3600 rev/min. If contact is made with this shaft when the engine is running, injury can occur.

C Exhaust Outlet

Diesel marine propulsion engines emit exhaust gases at very high temperatures - around 400 - 550°C. Engines are supplied with either wet exhaust outlet (water injection bend) or dry outlet (dry exhaust stub) - see option list. At the outlet next to the heat exchanger/header tank, the exhaust outlet can become very hot and if touched, can injure. This must be lagged or avoided by ensuring adequate guarding. It is the responsibility of the installer to lag the exhaust system if a dry system is used. Exhaust gases are harmful if ingested, the installer must therefore ensure that exhaust pipes are led overboard and that leakage in the vessel does not occur.

D Fuel

i) Fuel Lines

Diesel engines are equipped with high pressure fuel injection pumps, if leakages occur, or if pipes fracture, fuel at a high pressure can harm personnel. Skin must be thoroughly cleaned in the event of contact with diesel fuel.

ii) Fuel Supply Connections

Engines are supplied with 8mm compression fittings. The installer must ensure that when connections are made, they are clean and free of leaks.

E Oil

The Beta propulsion unit is supplied with 2 dipsticks, one for the engine and one for the gearbox. Ensure dipsticks are returned and secure after checking, if not oil leaks can cause infection when touched. All oil must be removed from the skin to prevent infection.

F Scalding

An engine running under load will have a closed circuit fresh water temperature of 85° to 95°C. **The pressure cap on the top of the heat exchanger must not be removed when the engine is running**. It can only be removed when the engine is stopped and has cooled down.

G Transportation/Lifting

Engines are supplied on transportable pallets. Lifting eyes on engines are used for lifting engine and gearbox assembly only, not the pallet and associated kit.

GENERAL DECLARATION

This machinery is not intended to be put into service until it has been incorporated into or with other machinery. It is the responsibility of the purchaser/installer/owner, to ensure that the machinery is properly guarded and that all necessary health and safety requirements, in accordance with the laws of the relevant country, are met before it is put into service.

Signed:

J A Growcoot, C.E.O, Beta Marine Limited.

Note: Recreational Craft

Where applicable, the purchaser/installer/owner and operator must be responsible for making sure that the Recreational Craft Directive 2013/53/EU is complied with.

Engine Technical Specifications

Engine Model	Beta 10
Application	**Recreational & Commercial Use**
Kubota/Beta Marine 4 - Cycle Base Engine	BZ482
Cylinders - No. In-line	2
Naturally Aspirated	✓
Turbocharged	-
After Treatment - Exhaust Gas Recirculation	-
Combustion Chamber - E TVCS Indirect Injection	✓
Combustion Chamber - E-CDIS Direct Injection	-
Fuel Injection Pressure - **kgf/cm² (psi)**	140 (1991)
Fuel Injection Pump - In-Line	✓
Fuel Injection Timing BTDC - **°/rpm (°/rpm)**	22.0°
Fuel - Diesel Fuel Oil To EN590 Or ASTM D975	✓
Engine Governor	All Speed Mechanical
Bore & Stroke - **mm (cu.in)**	67.0 x 68.0 (2.64 x 2.68)
Compression Ratio	23.5
Displacement - **cc (cu in)**	479 (29.23)
EU Compliance 2013/53/EU - Engine Maximum Output - **HP/rpm**	10.0 @ 3000
EU Compliance 2013/53/EU - Engine Maximum Output - **kW/rpm**	8.3 @ 3000
EU Maximum Torque - **Nm**	27.7 @ 2600
US EPA Compliance 40 CFR 1042 - Engine Continuous Output - **HP/rpm**	-
US EPA Compliance 40 CFR 1042 - Engine Continuous Output - **kW/rpm**	-
US Maximum Torque - **ft/lbs**	-
Starting Aid	Glow Plug
Firing Order	1-2
Valve Tip Clearance (Cold) - **mm (in)**	0.165 (0.0064)
Direction of Rotation - Counter Clockwise (Viewed From The Flywheel)	✓
Lubricating Oil System - Forced By Trochoid Pump	✓
Lubricating Oil Pressure At Idle - **kgf/cm² (psi)**	0.5 > (7.1 >)
Lubricating Oil Pressure At Rated RPM - **kgf/cm² (psi)**	2.0 - 4.5 (28.0 - 64.0)
Lubricating Oil Capacity Of Standard Sump - **L (U.S gal)**	2.5 (0.66)
Lubricating Oil Capacity Of Shallow Sump - **L (U.S gal)**	2.2 (0.58)
Lubricating Oil SAE - **Ambient Temperatures Change Requirement, refer to:**	Page 38
Engine Closed Circuit Coolant Circulation - Pressurised, Forced By Water Pump	✓
Engine Closed Circuit Coolant Capacity - Heat Exchanger Engines - **L (U.S gal)**	2.5 (0.66)
Engine Closed Circuit Coolant - Anti-freeze Mixed 30% > 50% With Water, refer to:	Page 34
40 Amp 12 Volt Starter Battery Alternator - Grounded Earth Polyvee Drive	✓
70 Amp 12 Volt Starter Battery Alternator - Grounded Earth Polyvee Drive	-
75 Amp 12 Volt Starter Battery Alternator - Grounded Earth Polyvee Drive	Opt.
120 Amp 12 Volt Starter Battery Alternator - Grounded Earth Polyvee Drive	Opt.
55 Amp 12 Volt Starter Battery Alternator - Insulated Return Polyvee Drive	Opt.
70 Amp 12 Volt Starter Battery Alternator - Insulated Return Polyvee Drive	-
120 Amp 12 Volt Secondary Domestic Battery Alternator - Grounded Earth Polyvee Drive	-
3.5 kVA 230 Volt 50Hz Single Phase Travel Power - Polyvee Drive	-
5.0 kVA 230 Volt 50Hz Single Phase Travel Power - Polyvee Drive	-
Minimum Recommended Battery Capacity	70Ah 450CCA
Approximate Nett Dry Weight - **Kg (lbs)**	89 (169.0)

Engine Model	Beta 14
Application	**Recreational & Commercial Use**
Kubota/Beta Marine 4 - Cycle Base Engine	BZ482
Cylinders - No. In-line	2
Naturally Aspirated	✓
Turbocharged	-
After Treatment - Exhaust Gas Recirculation	-
Combustion Chamber - E TVCS Indirect Injection	✓
Combustion Chamber - E-CDIS Direct Injection	-
Fuel Injection Pressure - **kgf/cm² (psi)**	140 (1991)
Fuel Injection Pump - In-Line	✓
Fuel Injection Timing BTDC - **°/rpm (°/rpm)**	22.0°
Fuel - Diesel Fuel Oil To EN590 Or ASTM D975	✓
Engine Governor	All Speed Mechanical
Bore & Stroke - **mm (cu.in)**	67.0 x 68.0 (2.64 x 2.68)
Compression Ratio	23.5
Displacement - **cc (cu in)**	479 (29.23)
EU Compliance 2013/53/EU - Engine Maximum Output - **HP/rpm**	13.5 @ 3600
EU Compliance 2013/53/EU - Engine Maximum Output - **kW/rpm**	9.9 @ 3600
EU Maximum Torque - **Nm**	27.7 @ 2600
US EPA Compliance 40 CFR 1042 - Engine Continuous Output - **HP/rpm**	13.0 @ 3600
US EPA Compliance 40 CFR 1042 - Engine Continuous Output - **kW/rpm**	9.9 @ 3600
US Maximum Torque - **ft/lbs**	19.0 @ 2600
Starting Aid	Glow Plug
Firing Order	1-2
Valve Tip Clearance (Cold) - **mm (in)**	0.165 (0.0064)
Direction of Rotation - Counter Clockwise (Viewed From The Flywheel)	✓
Lubricating Oil System - Forced By Trochoid Pump	✓
Lubricating Oil Pressure At Idle - **kgf/cm² (psi)**	0.5 > (7.1 >)
Lubricating Oil Pressure At Rated RPM - **kgf/cm² (psi)**	2.0 - 4.5 (28.0 - 64.0)
Lubricating Oil Capacity Of Standard Sump - **L (U.S gal)**	2.5 (0.66)
Lubricating Oil Capacity Of Shallow Sump - **L (U.S gal)**	2.2 (0.58)
Lubricating Oil SAE - **Ambient Temperatures Change Requirement, refer to:**	Page 38
Engine Closed Circuit Coolant Circulation - Pressurised, Forced By Water Pump	✓
Engine Closed Circuit Coolant Capacity - Heat Exchanger Engines - **L (U.S gal)**	2.5 (0.66)
Engine Closed Circuit Coolant - Anti-freeze Mixed 30% > 50% With Water, refer to:	Page 34
40 Amp 12 Volt Starter Battery Alternator - Grounded Earth Polyvee Drive	✓
70 Amp 12 Volt Starter Battery Alternator - Grounded Earth Polyvee Drive	-
75 Amp 12 Volt Starter Battery Alternator - Grounded Earth Polyvee Drive	Opt.
120 Amp 12 Volt Starter Battery Alternator - Grounded Earth Polyvee Drive	Opt.
55 Amp 12 Volt Starter Battery Alternator - Insulated Return Polyvee Drive	Opt.
70 Amp 12 Volt Starter Battery Alternator - Insulated Return Polyvee Drive	-
120 Amp 12 Volt Secondary Domestic Battery Alternator - Grounded Earth Polyvee Drive	-
3.5 kVA 230 Volt 50Hz Single Phase Travel Power - Polyvee Drive	-
5.0 kVA 230 Volt 50Hz Single Phase Travel Power - Polyvee Drive	-
Minimum Recommended Battery Capacity	70Ah 450CCA
Approximate Nett Dry Weight - **Kg (lbs)**	89 (169.0)

Beta 16	Beta 20	Beta 25
Recreational & Commercial Use	**Recreational & Commercial Use**	**Recreational & Commercial Use**
BZ602	BD722	BD902
2	3	3
✓	✓	✓
-	-	-
-	-	-
✓	✓	✓
-	-	-
140 (1991)	140 (1991)	140 (1991)
✓	✓	✓
21.0°	22.0°	21.0°
✓	✓	✓
All Speed Mechanical	All Speed Mechanical	All Speed Mechanical
72.0 x 73.6 (2.83 x 2.90)	67.0 x 68.0 (2.64 x 2.68)	72.0 x 73.6 (2.83 x 2.90)
24.0	23.5	24.0
599 (36.55)	719 (43.88)	898 (54.80)
16.0 @ 3600	20.0 @ 3600	25.0 @ 3600
12.0 @ 3600	14.9 @ 3600	18.5 @ 3600
37.8 @ 2600	45.8 @ 2600	56.1 @ 2400
16.0 @ 3600	20.0 @ 3600	25.0 @ 3600
12.5 @ 3600	14.9 @ 3600	18.5 @ 3600
23.3 @ 2600	29.2 @ 2600	36.5 @ 2400
Glow Plug	Glow Plug	Glow Plug
1-2	1-2-3	1-2-3
0.165 (0.0064)	0.165 (0.0064)	0.165 (0.0064)
✓	✓	✓
✓	✓	✓
0.5 > (7.1 >)	0.5 > (7.1 >)	0.5 > (7.1 >)
2.0 - 4.5 (28.0 - 64.0)	2.0 - 4.5 (28.0 - 64.0)	2.0 - 4.5 (28.0 - 64.0)
2.9 (0.76)	3.8 (1.00)	4.5 (1.19)
2.6 (0.69)	3.4 (0.90)	3.8 (1.00)
Page 38	Page 38	Page 38
✓	✓	✓
2.5 (0.66)	3.0 (0.80)	3.25 (0.86)
Page 34	Page 34	Page 34
✓	✓	✓
-	-	-
Opt.	Opt.	Opt.
Opt.	Opt.	Opt.
Opt.	Opt.	Opt.
-	-	-
-	-	-
-	-	-
-	-	-
70Ah 450CCA	70Ah 450CCA	70Ah 450CCA
95 (209.5)	104 (229.5)	113 (249.5)

Engine Model	Beta 30
Application	**Recreational & Commercial Use**
Kubota/Beta Marine 4 - Cycle Base Engine	BD1105
Cylinders - No. In-line	3
Naturally Aspirated	✓
Turbocharged	-
After Treatment - Exhaust Gas Recirculation	-
Combustion Chamber - E TVCS Indirect Injection	✓
Combustion Chamber - E-CDIS Direct Injection	-
Fuel Injection Pressure - **kgf/cm² (psi)**	140 (1991)
Fuel Injection Pump - In-Line	✓
Fuel Injection Timing BTDC - **°/rpm (°/rpm)**	17.0°
Fuel - Diesel Fuel Oil To EN590 Or ASTM D975	✓
Engine Governor	All Speed Mechanical
Bore & Stroke - **mm (cu.in)**	78.0 x 78.4 (3.07 x 3.09)
Compression Ratio	24.0
Displacement - **cc (cu in)**	1123 (68.53)
EU Compliance 2013/53/EU - Engine Maximum Output - **HP/rpm**	30.0 @ 3600
EU Compliance 2013/53/EU - Engine Maximum Output - **kW/rpm**	22.1 @ 3600
EU Maximum Torque - **Nm**	65.2 @ 2600
US EPA Compliance 40 CFR 1042 - Engine Continuous Output - **HP/rpm**	29.0 @ 3600
US EPA Compliance 40 CFR 1042 - Engine Continuous Output - **kW/rpm**	21.7 @ 3000
US Maximum Torque - **ft/lbs**	42.3 @ 2600
Starting Aid	Glow Plug
Firing Order	1-2-3
Valve Tip Clearance (Cold) - **mm (in)**	0.165 (0.0064)
Direction of Rotation - Counter Clockwise (Viewed From The Flywheel)	✓
Lubricating Oil System - Forced By Trochoid Pump	✓
Lubricating Oil Pressure At Idle - **kgf/cm² (psi)**	0.5 > (7.1 >)
Lubricating Oil Pressure At Rated RPM - **kgf/cm² (psi)**	2.0 - 4.5 (28.0 - 64.0)
Lubricating Oil Capacity Of Standard Sump - **L (U.S gal)**	5.0 (1.32)
Lubricating Oil Capacity Of Shallow Sump - **L (U.S gal)**	4.0 (1.06)
Lubricating Oil SAE - **Ambient Temperatures Change Requirement, refer to:**	Page 38
Engine Closed Circuit Coolant Circulation - Pressurised, Forced By Water Pump	✓
Engine Closed Circuit Coolant Capacity - Heat Exchanger Engines - **L (U.S gal)**	5.5 (1.45)
Engine Closed Circuit Coolant - Anti-freeze Mixed 30% > 50% With Water, refer to:	Page 34
40 Amp 12 Volt Starter Battery Alternator - Grounded Earth Polyvee Drive	✓
70 Amp 12 Volt Starter Battery Alternator - Grounded Earth Polyvee Drive	-
75 Amp 12 Volt Starter Battery Alternator - Grounded Earth Polyvee Drive	Opt.
120 Amp 12 Volt Starter Battery Alternator - Grounded Earth Polyvee Drive	-
55 Amp 12 Volt Starter Battery Alternator - Insulated Return Polyvee Drive	Opt.
70 Amp 12 Volt Starter Battery Alternator - Insulated Return Polyvee Drive	Opt.
120 Amp 12 Volt Secondary Domestic Battery Alternator - Grounded Earth Polyvee Drive	-
3.5 kVA 230 Volt 50Hz Single Phase Travel Power - Polyvee Drive	-
5.0 kVA 230 Volt 50Hz Single Phase Travel Power - Polyvee Drive	-
Minimum Recommended Battery Capacity	70Ah 450CCA
Approximate Nett Dry Weight - **Kg (lbs)**	139 (306.5)

Beta 35	Beta 38	Beta 45T
Recreational & Commercial Use	**Recreational & Commercial Use**	**Recreational & Commercial Use**
BV1505	BV1505	BV1505T
4	4	4
✓	✓	-
-	-	✓
-	-	-
✓	✓	✓
-	-	-
140 (1991)	140 (1991)	140 (1991)
✓	✓	✓
17.0°	17.0°	18.0°
✓	✓	✓
All Speed Mechanical	All Speed Mechanical	All Speed Mechanical
78.0 x 78.4 (3.07 x 3.09)	78.0 x 78.4 (3.07 x 3.09)	78.0 x 78.4 (3.07 x 3.09)
24.0	24.0	23.0
1498 (91.41)	1498 (91.41)	1498 (91.41)
35.0 @ 2800	38.0 @ 3600	45.0 @ 3000
26.0 @ 2800	28.4 @ 3600	33.4 @ 3000
93.9 @ 1700	87.0 @ 2450	114.0 @ 2000
33.0 @ 2800	36.0 @ 3600	-
24.5 @ 2800	27.0 @ 3600	-
61.9 @ 1700	52.5 @ 2600	-
Glow Plug	Glow Plug	Glow Plug
1-3-4-2	1-3-4-2	1-3-4-2
0.165 (0.0064)	0.165 (0.0064)	0.165 (0.0064)
✓	✓	✓
✓	✓	✓
0.5 > (7.1 >)	0.5 > (7.1 >)	0.69 > (9.9 >)
2.0 - 4.5 (28.0 - 64.0)	2.0 - 4.5 (28.0 - 64.0)	3.0 - 4.5 (43.0 - 64.0)
6.0 (1.59)	6.0 (1.59)	6.7 (1.77)
5.0 (1.32)	5.0 (1.32)	5.0 (1.32)
Page 38	Page 38	Page 38
✓	✓	✓
7.0 (1.85)	7.0 (1.85)	7.0 (1.85)
Page 34	Page 34	Page 34
✓	✓	✓
-	-	-
Opt.	Opt.	Opt.
-	-	-
Opt.	Opt.	Opt.
Opt.	Opt.	Opt.
-	Opt.	Opt.
-	-	-
-	-	-
70Ah 450CCA	70Ah 450CCA	70Ah 450CCA
168 (370.5)	168 (370.5)	175 (386.0)

Engine Technical Specifications

Engine Model	Beta 43
Application	**Recreational & Commercial Use**
Kubota/Beta Marine 4 - Cycle Base Engine	BV2003
Cylinders - No. In-line	4
Naturally Aspirated	✓
Turbocharged	-
After Treatment - Exhaust Gas Recirculation	-
Combustion Chamber - E TVCS Indirect Injection	✓
Combustion Chamber - E-CDIS Direct Injection	-
Fuel Injection Pressure - **kgf/cm² (psi)**	140 (1991)
Fuel Injection Pump - In-Line	✓
Fuel Injection Timing BTDC - **°/rpm (°/rpm)**	17.25°
Fuel - Diesel Fuel Oil To EN590 Or ASTM D975	✓
Engine Governor	All Speed Mechanical
Bore & Stroke - **mm (cu.in)**	83.0 x 92.4 (3.27 x 3.64)
Compression Ratio	22.8
Displacement - **cc (cu in)**	1999 (122.0)
EU Compliance 2013/53/EU - Engine Maximum Output - **HP/rpm**	43.0 @ 2800
EU Compliance 2013/53/EU - Engine Maximum Output - **kW/rpm**	32.0 @ 2800
EU Maximum Torque - **Nm**	130.3 @ 1600
US EPA Compliance 40 CFR 1042 - Engine Continuous Output - **HP/rpm**	44.0 @ 2800
US EPA Compliance 40 CFR 1042 - Engine Continuous Output - **kW/rpm**	32.6 @ 2800
US Maximum Torque - **ft/lbs**	82.5 @ 1600
Starting Aid	Glow Plug
Firing Order	1-3-4-2
Valve Tip Clearance (Cold) - **mm (in)**	0.20 (0.0078)
Direction of Rotation - Counter Clockwise (Viewed From The Flywheel)	✓
Lubricating Oil System - Forced By Trochoid Pump	✓
Lubricating Oil Pressure At Idle - **kgf/cm² (psi)**	1.0 > (14.0 >)
Lubricating Oil Pressure At Rated RPM - **kgf/cm² (psi)**	3.0 - 4.5 (43.0 - 64.0)
Lubricating Oil Capacity Of Standard Sump - **L (U.S gal)**	9.5 (2.51)
Lubricating Oil Capacity Of Shallow Sump - **L (U.S gal)**	7.0 (1.85)
Lubricating Oil SAE - **Ambient Temperatures Change Requirement, refer to:**	Page 38
Engine Closed Circuit Coolant Circulation - Pressurised, Forced By Water Pump	✓
Engine Closed Circuit Coolant Capacity - Heat Exchanger Engines - **L (U.S gal)**	7.4 (1.69)
Engine Closed Circuit Coolant - Anti-freeze Mixed 30% > 50% With Water, refer to:	Page 34
70 Amp 12 Volt Starter Battery Alternator - Grounded Earth V Drive	✓
70 Amp 12 Volt Starter Battery Alternator - Grounded Earth Polyvee Drive	Opt.
120 Amp 12 Volt Starter Battery Alternator - Grounded Earth Polyvee Drive	Opt.
175 Amp 12 Volt Starter Battery Alternator - Grounded Earth Polyvee Drive	Opt.
70 Amp 12 Volt Starter Battery Alternator - Insulated Return V Drive	Opt.
70 Amp 12 Volt Starter Battery Alternator - Insulated Return Polyvee Drive	Opt.
175 Amp 12 Volt Secondary Domestic Battery Alternator - Grounded Earth Polyvee Drive	Opt.
55 Amp 24 Volt Starter Battery Alternator - Grounded Earth V Drive	Opt.
80 Amp 24 Volt Secondary Domestic Battery Alternator - Grounded Earth V Drive	Opt.
60 Amp 24 Volt Secondary Domestic Battery Alternator - Insulated Return V Drive	Opt.
3.5 kVA 230 Volt 50Hz Single Phase Travel Power - Polyvee Drive	Opt.
5.0 kVA 230 Volt 50Hz Single Phase Travel Power - Polyvee Drive	Opt.
Minimum Recommended Battery Capacity	94Ah 620CCA
Approximate Nett Dry Weight - **Kg (lbs)**	218 (525.0)

Beta 50	Beta 60	Beta 70T
Recreational & Commercial Use	**Recreational & Commercial Use**	**Recreational & Commercial Use**
BV2003	BV2403	BV2607DI-T
4	4	4
✓	✓	-
-	-	✓
-	-	External
✓	✓	-
-	-	✓
140 (1991)	140 (1991)	1st 190 (2702), 2nd 220 (3129)
✓	✓	✓
16.25°	17.25°	1.25° After TDC
✓	✓	✓
All Speed Mechanical	All Speed Mechanical	All Speed Mechanical
87.0 x 92.4 (3.43 x 3.64)	87.0 x 102.4 (3.43 x 4.03)	87.0 x 110.0 (3.43 x 4.33)
22.0	23.2	19.0
2197 (134.1)	2434 (148.5)	2615 (159.6)
50.0 @ 2800	56.0 @ 2700	70.0 @ 2800
37.3 @ 2800	41.8 @ 2700	52.0 @ 2800
143.2 @ 1600	158.6 @ 1600	220.0 @ 1600
48.0 @ 2800	49.0 @ 2700	70.0 @ 2800
35.9 @ 2800	36.5 @ 2700	52.0 @ 2800
90.0 @ 1600	95.3 @ 1600	131.3 @ 1600
Glow Plug	Glow Plug	Glow Plug
1-3-4-2	1-3-4-2	1-3-4-2
0.20 (0.0078)	0.20 (0.0078)	0.20 (0.0078)
✓	✓	✓
✓	✓	✓
1.0 > (14.0 >)	1.0 > (14.0 >)	1.0 > (14.0 >)
3.0 - 4.5 (43.0 - 64.0)	3.0 - 4.5 (43.0 - 64.0)	3.0 - 4.5 (43.0 - 64.0)
9.5 (2.51)	9.5 (2.51)	9.5 (2.51)
7.0 (1.85)	7.0 (1.85)	7.0 (1.85)
Page 38	Page 38	Page 38
✓	✓	✓
7.4 (1.69)	7.4 (1.69)	7.4 (1.69)
Page 34	Page 34	Page 34
✓	✓	✓
Opt.	Opt.	Opt.
Opt.	Opt.	Opt.
Opt.	Opt.	-
Opt.	Opt.	Opt.
Opt.	Opt.	Opt.
Opt.	Opt.	Opt.
Opt.	Opt.	Opt.
Opt.	Opt.	Opt.
Opt.	Opt.	Opt.
Opt.	Opt.	Opt.
Opt.	Opt.	Opt.
94Ah 620CA	94Ah 620CCA	180Ah 1050CCA
260 (574.0)	287 (633.0)	287 (633.0)

Engine Model	Beta 75
Application	**Recreational & Commercial Use**
Kubota/Beta Marine 4 - Cycle Base Engine	BV3600
Cylinders - No. In-line	4
Naturally Aspirated	✓
Turbocharged	-
After Treatment - Exhaust Gas Recirculation	-
Combustion Chamber - E TVCS Indirect Injection	✓
Combustion Chamber - E-CDIS Direct Injection	-
Fuel Injection Pressure - **kgf/cm² (psi)**	140 (1991)
Fuel Injection Pump - In-Line	✓
Fuel Injection Timing BTDC - **°/rpm (°/rpm)**	9.0°
Fuel - Diesel Fuel Oil To EN590 Or ASTM D975	✓
Engine Governor	All Speed Mechanical
Bore & Stroke - **mm (cu.in)**	98.0 x 120.0 (3.86 x 4.72)
Compression Ratio	22.6
Displacement - **cc (cu in)**	3620 (220.9)
EU Compliance 2013/53/EU - Engine Maximum Output - **HP/rpm**	75.0 @ 2600
EU Compliance 2013/53/EU - Engine Maximum Output - **kW/rpm**	56.0 @ 2600
EU Maximum Torque - **Nm**	221.0 @ 1600
US EPA Compliance 40 CFR 1042 - Engine Continuous Output - **HP/rpm**	-
US EPA Compliance 40 CFR 1042 - Engine Continuous Output - **kW/rpm**	-
US Maximum Torque - **ft/lbs**	-
Starting Aid	Glow Plug
Firing Order	1-3-4-2
Valve Tip Clearance (Cold) - **mm (in)**	0.25 (0.0098)
Direction of Rotation - Counter Clockwise (Viewed From The Flywheel)	✓
Lubricating Oil System - Forced By Trochoid Pump	✓
Lubricating Oil Pressure At Idle - **kgf/cm² (psi)**	1.0 > (14.0 >)
Lubricating Oil Pressure At Rated RPM - **kgf/cm² (psi)**	3.0 - 4.5 (43.0 - 64.0)
Lubricating Oil Capacity Of Standard Sump - **L (U.S gal)**	13.2 (3.49)
Lubricating Oil Capacity Of Shallow Sump - **L (U.S gal)**	-
Lubricating Oil SAE - **Ambient Temperatures Change Requirement, refer to:**	Page 38
Engine Closed Circuit Coolant Circulation - Pressurised, Forced By Water Pump	✓
Engine Closed Circuit Coolant Capacity - Heat Exchanger Engines - **L (U.S gal)**	10.2 (2.70)
Engine Closed Circuit Coolant - Anti-freeze Mixed 30% > 50% With Water, refer to:	Page 34
70 Amp 12 Volt Starter Battery Alternator - Grounded Earth V Drive	✓
70 Amp 12 Volt Starter Battery Alternator - Grounded Earth Polyvee Drive	Opt.
120 Amp 12 Volt Starter Battery Alternator - Grounded Earth Polyvee Drive	Opt.
175 Amp 12 Volt Starter Battery Alternator - Grounded Earth Polyvee Drive	Opt.
70 Amp 12 Volt Starter Battery Alternator - Insulated Return V Drive	Opt.
70 Amp 12 Volt Starter Battery Alternator - Insulated Return Polyvee Drive	Opt.
175 Amp 12 Volt Secondary Domestic Battery Alternator - Grounded Earth Polyvee Drive	Opt.
55 Amp 24 Volt Starter Battery Alternator - Grounded Earth V Drive	Opt.
80 Amp 24 Volt Secondary Domestic Battery Alternator - Grounded Earth V Drive	Opt.
60 Amp 24 Volt Secondary Domestic Battery Alternator - Insulated Return V Drive	Opt.
3.5 kVA 230 Volt 50Hz Single Phase Travel Power - Polyvee Drive	Opt.
5.0 kVA 230 Volt 50Hz Single Phase Travel Power - Polyvee Drive	Opt.
Minimum Recommended Battery Capacity	180Ah 1050CCA
Approximate Nett Dry Weight - **Kg (lbs)**	414 (913.0)

Beta 85T	Beta 90	Beta 90T
Recreational & Commercial Use	**Commercial Use Only**	**Recreational & Commercial Use**
BV3307T	BV3800DI	BV3600T
4	4	4
-	✓	-
✓	-	✓
External	-	Internal
-	✓	-
✓	-	✓
1st 190 (2702), 2nd 230 (3271)	1st 190 (2702), 2nd 240 (3414)	140 (1991)
✓	✓	✓
0.3° After TDC	14.0°	5.0°
✓	✓	✓
All Speed Mechanical	All Speed Mechanical	All Speed Mechanical
94.0 x 120.0 (3.70 x 4.72)	98.0 x 120.0 (3.86 x 4.72)	98.0 x 120.0 (3.86 x 4.72)
20.0	20.0	21.8
3331 (203.3)	3620 (220.9)	3620 (220.9)
85.0 @ 2800	90.0 @ 2600	90.0 @ 2600
62.0 @ 2800	67.1 @ 2600	67.1 @ 2600
304.0 @ 1140	285.0 @ 1400	298.0 @ 1700
83.0 @ 2800	-	-
62.0 @ 2800	-	-
155.7 @ 1140	-	-
Glow Plug	Glow Plug	Glow Plug
1-3-4-2	1-3-4-2	1-3-4-2
0.15 (0.0059)	0.25 (0.0098)	0.15 (0.0059)
✓	✓	✓
✓	✓	✓
0.5 > (7.1 >)	0.5 > (7.1 >)	0.5 > (7.1 >)
4.0 - 6.0 (28.5 - 56.8)	2.0 - 4.0 (28.0 - 57.0)	4.0 - 6.0 (28.5 - 56.8)
11.0 (2.90)	13.2 (3.49)	13.2 (3.49)
-	-	-
Page 38	Page 38	Page 38
✓	✓	✓
12.5 (3.30)	10.2 (2.70)	10.2 (2.70)
Page 34	Page 34	Page 34
✓	✓	✓
Opt.	Opt.	Opt.
Opt.	Opt.	Opt.
-	Opt.	Opt.
Opt.	Opt.	Opt.
Opt.	Opt.	Opt.
Opt.	Opt.	Opt.
Opt.	Opt.	Opt.
Opt.	Opt.	Opt.
Opt.	Opt.	Opt.
Opt.	Opt.	Opt.
Opt.	Opt.	Opt.
180Ah 1050CA	180Ah 1050CCA	180Ah 1050CCA
359 (792.0)	425 (937.0)	425 (937.0)

Engine Model	Beta 105T
Application	**Recreational & Commercial Use**
Kubota/Beta Marine 4 - Cycle Base Engine	BV3800-DI-T
Cylinders - No. In-line	4
Naturally Aspirated	-
Turbocharged	✓
After Treatment - Exhaust Gas Recirculation	External
Combustion Chamber - E TVCS Indirect Injection	-
Combustion Chamber - E-CDIS Direct Injection	✓
Fuel Injection Pressure - **kgf/cm² (psi)**	1st 190 (2702), 2nd 240 (3414)
Fuel Injection Pump - In-Line	✓
Fuel Injection Timing BTDC - **°/rpm (°/rpm)**	7.0°
Fuel - Diesel Fuel Oil To EN590 Or ASTM D975	✓
Engine Governor	All Speed Mechanical
Bore & Stroke - **mm (cu.in)**	98.0 x 120.0 (3.86 x 4.72)
Compression Ratio	19.0
Displacement - **cc (cu in)**	3769 (230.0)
EU Compliance 2013/53/EU - Engine Maximum Output - **HP/rpm**	98.0 @ 2600
EU Compliance 2013/53/EU - Engine Maximum Output - **kW/rpm**	73.0 @ 2600
EU Maximum Torque - **Nm**	325.0 @ 1600
US EPA Compliance 40 CFR 1042 - Engine Continuous Output - **HP/rpm**	-
US EPA Compliance 40 CFR 1042 - Engine Continuous Output - **kW/rpm**	-
US Maximum Torque - **ft/lbs**	-
Starting Aid	Intake Manifold Air Heater
Firing Order	1-3-4-2
Valve Tip Clearance (Cold) - **mm (in)**	0.15 (0.0059)
Direction of Rotation - Counter Clockwise (Viewed From The Flywheel)	✓
Lubricating Oil System - Forced By Trochoid Pump	✓
Lubricating Oil Pressure At Idle - **kgf/cm² (psi)**	0.5 > (7.1 >)
Lubricating Oil Pressure At Rated RPM - **kgf/cm² (psi)**	4.0 - 6.0 (28.5 - 56.8)
Lubricating Oil Capacity Of Standard Sump - **L (U.S gal)**	13.2 (3.49)
Lubricating Oil Capacity Of Shallow Sump - **L (U.S gal)**	-
Lubricating Oil SAE - **Ambient Temperatures Change Requirement, refer to:**	Page 38
Engine Closed Circuit Coolant Circulation - Pressurised, Forced By Water Pump	✓
Engine Closed Circuit Coolant Capacity - Heat Exchanger Engines - **L (U.S gal)**	10.2 (2.70)
Engine Closed Circuit Coolant - Anti-freeze Mixed 30% > 50% With Water, refer to:	Page 34
70 Amp 12 Volt Starter Battery Alternator - Grounded Earth V Drive	✓
70 Amp 12 Volt Starter Battery Alternator - Grounded Earth Polyvee Drive	Opt.
120 Amp 12 Volt Starter Battery Alternator - Grounded Earth Polyvee Drive	Opt.
175 Amp 12 Volt Starter Battery Alternator - Grounded Earth Polyvee Drive	Opt.
70 Amp 12 Volt Starter Battery Alternator - Insulated Return V Drive	Opt.
70 Amp 12 Volt Starter Battery Alternator - Insulated Return Polyvee Drive	Opt.
175 Amp 12 Volt Secondary Domestic Battery Alternator - Grounded Earth Polyvee Drive	Opt.
55 Amp 24 Volt Starter Battery Alternator - Grounded Earth V Drive	Opt.
80 Amp 24 Volt Secondary Domestic Battery Alternator - Grounded Earth V Drive	Opt.
60 Amp 24 Volt Secondary Domestic Battery Alternator - Insulated Return V Drive	Opt.
3.5 kVA 230 Volt 50Hz Single Phase Travel Power - Polyvee Drive	Opt.
5.0 kVA 230 Volt 50Hz Single Phase Travel Power - Polyvee Drive	Opt.
Minimum Recommended Battery Capacity	180Ah 1050CA
Approximate Nett Dry Weight - **Kg (lbs)**	425 (937.0)

Beta 115T
Commercial Use Only
BV3800-DI-T
4
-
✓
External
-
✓
1st 190 (2702), 2nd 240 (3414)
✓
7.0°
✓
All Speed Mechanical
98.0 x 120.0 (3.94 x 4.72)
19.0
3769 (230.0)
115.0 @ 2800
85.7 @ 2800
348.0 @ 1600
-
-
-
Intake Manifold Air Heater
1-3-4-2
0.15 (0.0059)
✓
✓
0.5 > (7.1 >)
4.0 - 6.0 (28.5 - 56.8)
13.2 (3.49)
-
Page 38
✓
10.2 (2.70)
Page 34
✓
Opt.
Opt.
Opt.
Opt.
Opt.
Opt.
Opt.
Opt.
Opt.
Opt.
Opt.
180Ah 1050CA
425 (937.0)

Section 1: Installation Guidelines

INSTALLATION RECOMMENDATIONS

The installation details are basic guidelines to assist installation, however due to the great diversity of marine craft it is unrealistic to give definitive instructions.

Therefore Beta Marine can accept no responsibility for any damage or injury incurred during the installation of a Beta Marine engine whilst following these guidelines.

- All engines should be placed within an enclosure separated from living quarters and installed so as to minimise the risk of fires or spread of fires as well as hazards from toxic fumes, heat, noise or vibrations in the living quarters.
- Unless the engine is protected by a cover or its own enclosure, exposed moving or hot parts of the engine that could cause personal injury should be effectively shielded.
- Engine parts and accessories that require frequent inspection and/or servicing must be readily accessible.
- The insulating materials inside engine spaces shall be non-combustible.

VENTILATION

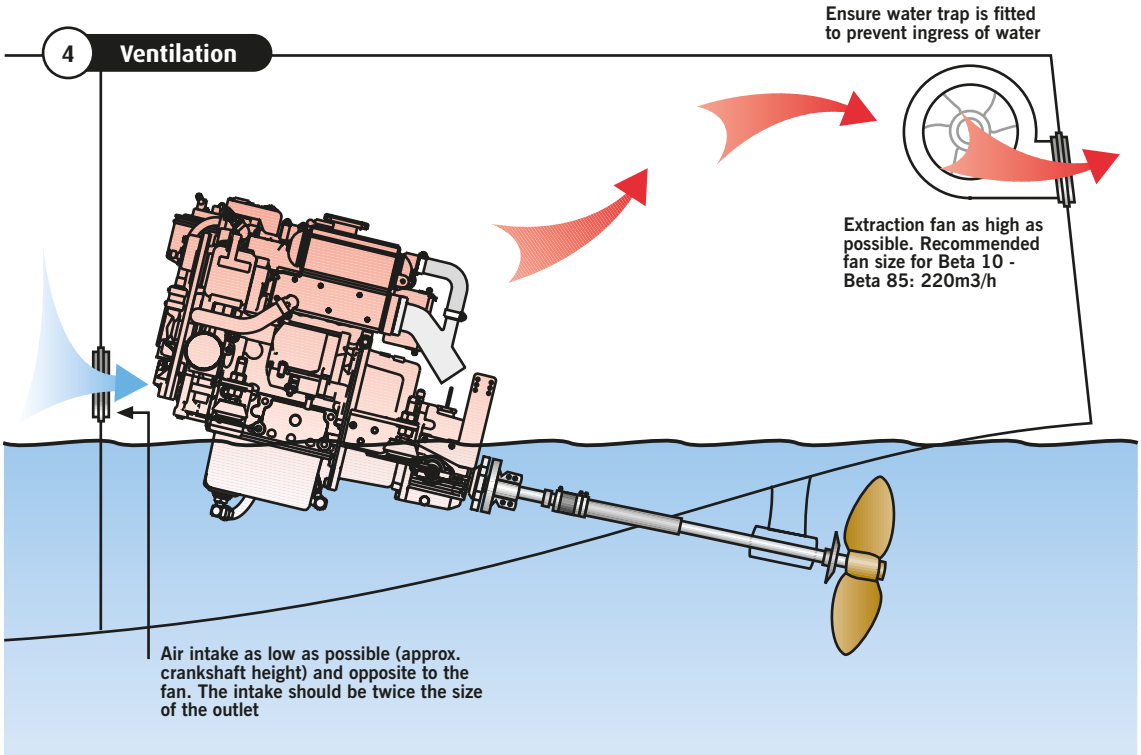

⚠ IMPORTANT!

'Super Silent' Variants - Natural ventilation to the acoustic enclosure must be provided.

It is recommended that the inlet and outlet areas for the ventilation are $^1/_3$ greater than the inlet and outlet areas built into the engine`s acoustic enclosure. If this is not the case forced ventilation should be considered but not connected directly to the acoustic enclosure.

An engine will produce radiated heat - approximately equal to $^1/_3$ of the engine output power. Additionally, larger amp starter battery and/or domestic battery bank charging alternators create heat, building ambient temperatures further.

As a consequence, it is highly important and the vessels owner and/or installation engineer/s are responsible to ensure that the engine compartment has adequate ventilation to enable efficient internal combustion, effective transference of heat out of the engine compartment/room and prevent the accumulation of gases, which might be emitted from starter batteries.

Best practice for efficient and effective ventilation is an air intake that is located in the engine compartment/room that is as low as possible, allowing cooler air to enter below the engine an air outlet with an electric powered extraction fan which should be located as high as possible in the engine compartment/room maximising ventilation and reducing ambient temperatures.

The cooler the engine compartment/room can be maintained the more efficient the engine will perform.

The required air flow volumes in m3/min = 0.05 x engine power in hp (naturally aspirated) or 0.06 x engine power in hp turbocharged.

TYPICAL VENTILATION REQUIREMENTS

	10hp	20hp	30hp	40hp	50hp	75hp	100hp	150hp
Combustion	14 cm^2	28 cm^2	43 cm^2	57 cm^2	71 cm^2	106 cm^2	142 cm^2	213 cm^2
Ventilation	13 cm^2	25 cm^2	37 cm^2	50 cm^2	62 cm^2	92 cm^2	123 cm^2	185 cm^2
Inlet/Outlet dia.	6 cm	9 cm	11 cm	12 cm	13 cm	16 cm	19 cm	22 cm

ENGINE MOUNTING

To ensure vibration free operation, the engine must be installed and correctly aligned on substantial engine bearers, extending as far forward and aft as possible, well braced and securely fastened to form an integral part of the hull.

The engine must be installed as low as possible on the substantial Anti-Vibration Mountings (AVM) pillar stud. This will limit vibration and extend the life of the AVM.

IMPORTANT!

Keep flexible mounts free from diesel fuel, engine coolant & lubrication oil to prevent deterioration.

IMPORTANT!

- **Do not set the engine feet high up the flexible mount pillar stud. This will cause excessive engine movement and vibration. Pack steel shims under the flexible mount and ensure that the flexible mounting is securely bolted to the engine bearer.**
- **The pillar stud on the flexible mount is secured into position by the lower locknut, ensure this is fully tightened.**

NB: Please ensure that the stud is not screwed too far through the mounting body so that it can touch the bearer. This will cause vibration and/or knocking noise. If the flexible mounting is too far offset then the loading on the flexible mounting will cause premature failure, modifications are needed. Please refer to image 6.

6 Engine Mount Alignment

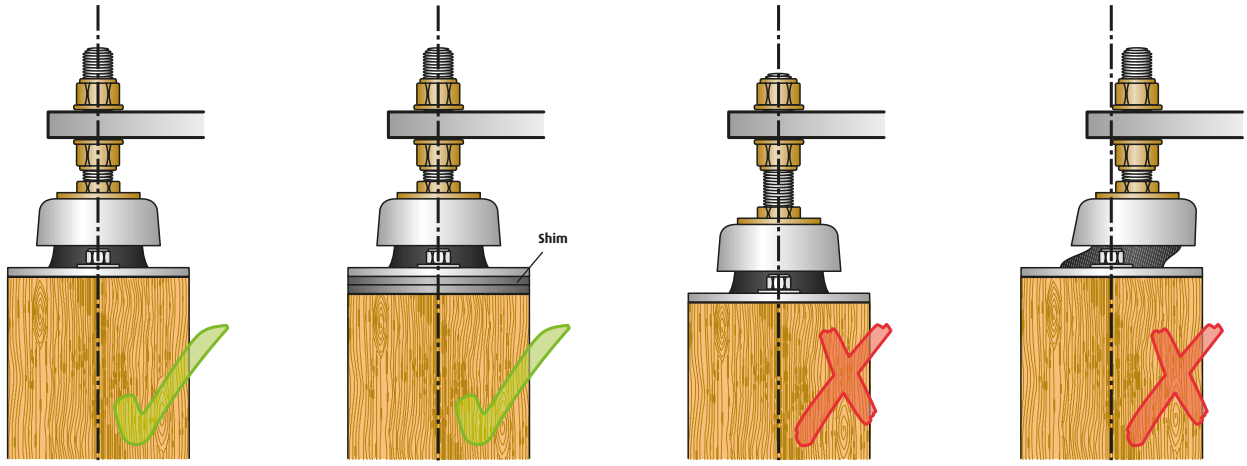

Recommended
Correct height and positioning

Acceptable
Shim(s) required to achieve correct height and positioning

NOT Recommended
Positioning too high on the pillar stud - requires shims

NOT Acceptable
NOT aligned - requires bearer modifications to correct

ENGINE INSTALLATION AT AN ANGLE

Beta Marine propulsion engines can be installed at angles up to a maximum of 15° flywheel up or flywheel down when static, and can be run at up to 25° when heeling.

However, if you are considering installing above 10° please contact Beta Marine or alternatively consider the 7° down angle gearbox.

Should the engine be installed at any angle above 10° but no greater than 15°, please consult Beta for advice concerning the dipstick calibration, failure to do so can cause problems with the lubrication of the engine.

Installation angles up to 10° the dipstick markings can be adhered too.

If in doubt please contact Beta Marine.

ALIGNMENT

To obtain accurate alignment the flexible mountings must be adjusted until alignment is attained, and the mountings must be locked in position. The engine/gearbox unit has to be aligned with the propeller shaft in two ways. The traditional engine alignment method involves measuring with either feeler gauges or a DTI (Dial Test Indicator) mounted on a magnetic foot so that they are aligned within 0.125mm (0.005”). The propeller shaft must be centered in the stern tube and running true - through the cutless bearing; if the propeller shaft is not correctly centered vibration will be experienced.

ANGULAR ALIGNMENT

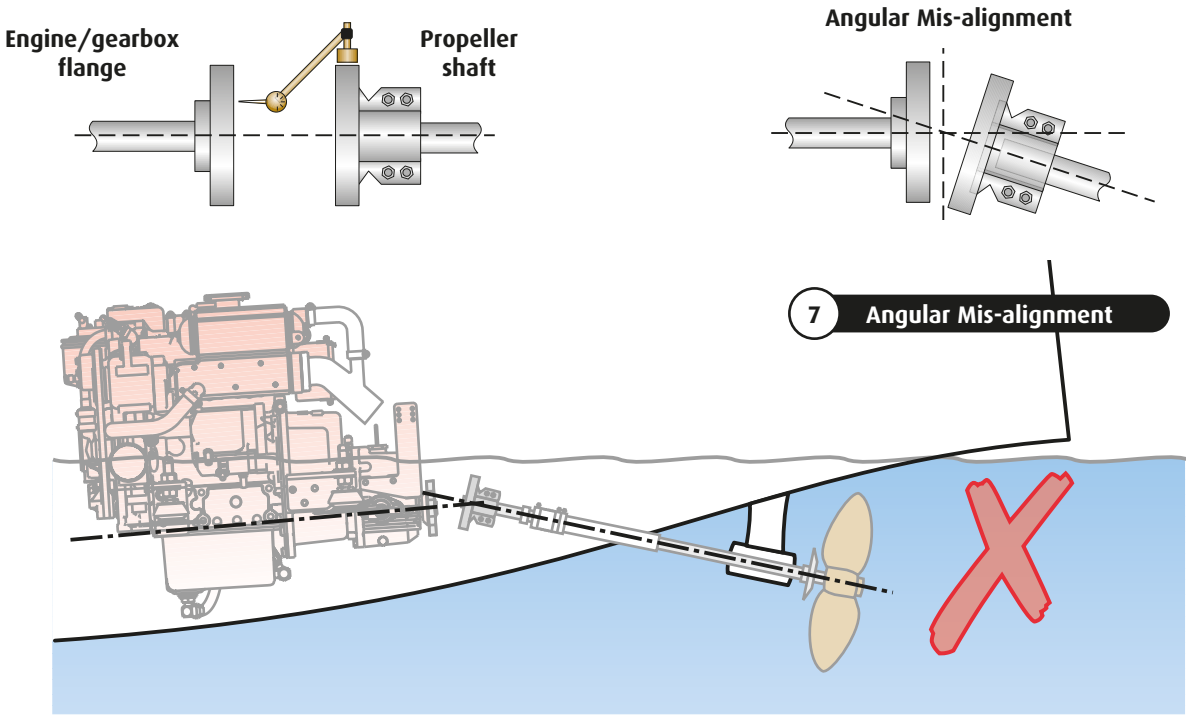

PARALLEL ALIGNMENT

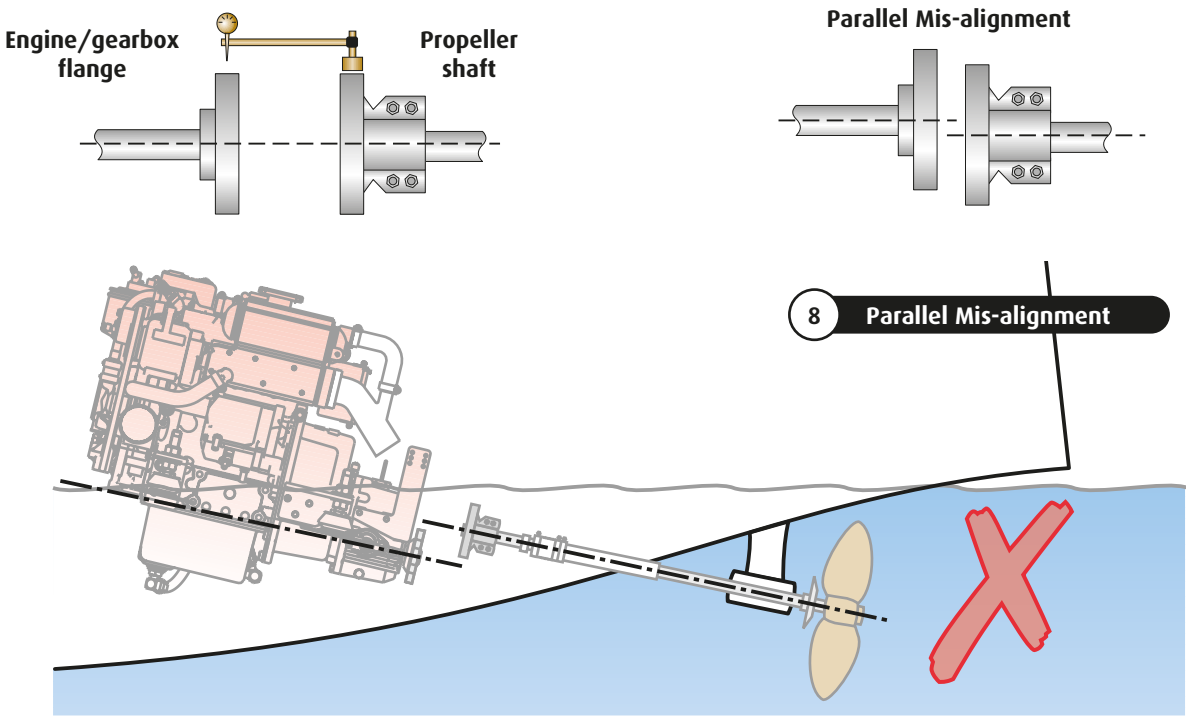

The engine mountings and the couplings must now be tightened in position and the alignment re-checked.

FLEXIBLE OUTPUT COUPLINGS

A flexible coupling mounted on the gearbox output flange is strongly recommended. Flexible couplings do not resolve poor alignment as they are designed to absorb torsional vibrations from the propeller which are transmitted along the propeller shaft. **Beta Marine can offer:**

R&D Coupling`s with a flexible nylon disc and optional Clamp Coupling.

9 R&D Flexible Couplings

10 R&D Clamp Couplings - Optional

The CentaFlex coupling design is able to absorb high torsional shocks and loads. These couplings are complete and replace the need for both a R&D flexible coupling and clamp coupling above.

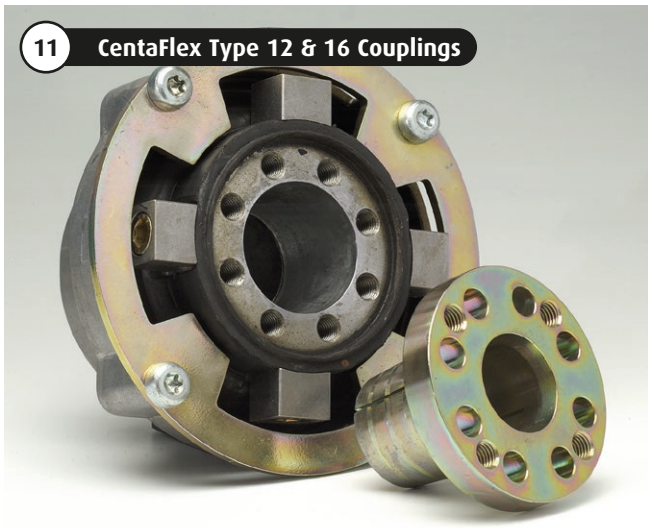

11 CentaFlex Type 12 & 16 Couplings

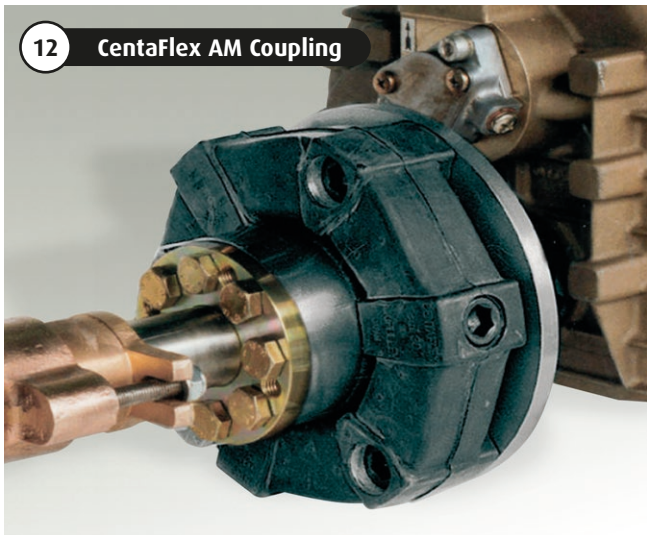

12 CentaFlex AM Coupling

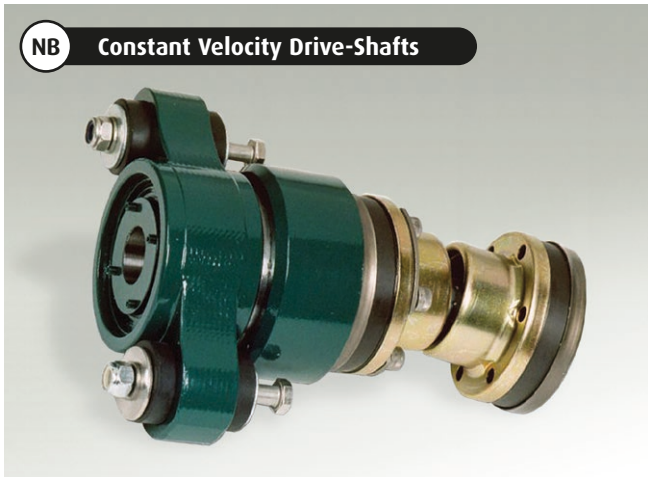

NB Constant Velocity Drive-Shafts

NB: If a constant velocity drive shaft is being considered for fitting then it maybe necessary to have the standard engine drive plate that is supplied replaced to avoid torsional noise problems. Please contact Beta Marine for technical guidance.

ENGINES WITH HEAT EXCHANGER COOLING

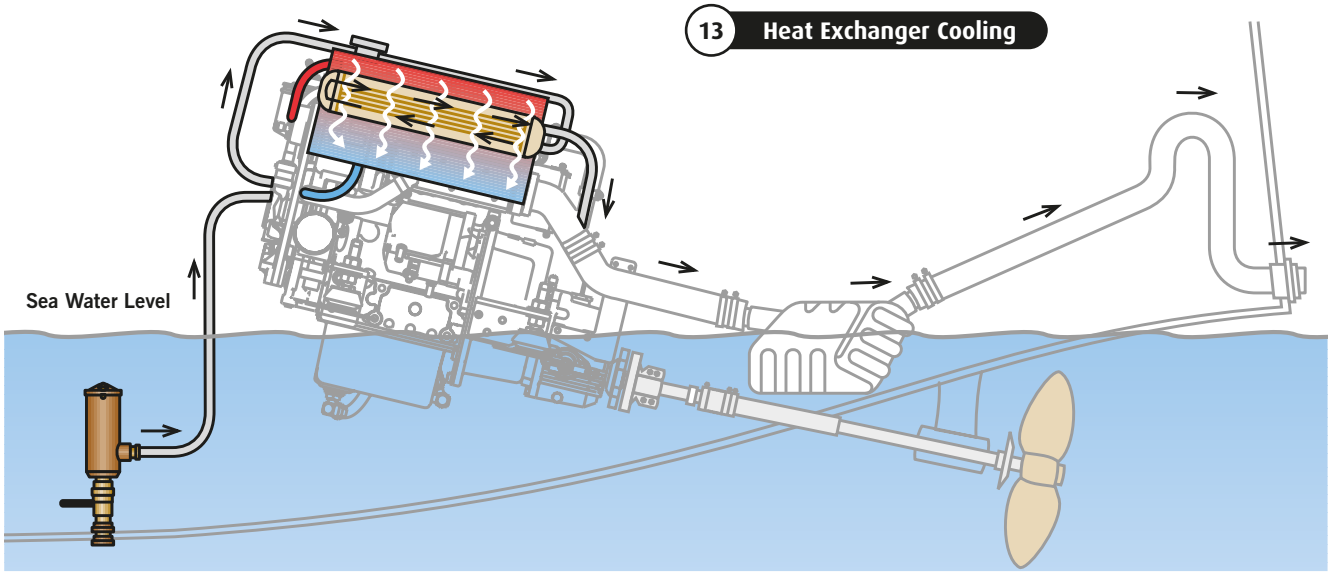

Heat Exchanger cooling takes in sea water through the bottom of the hull via a seacock with a strainer, to the seawater pump mounted on the engine. The seawater is pumped through piping on to the heat exchanger where it passes through the cupronickel 'tubestack'; first though the bottom pipes, then back through the top pipes before exiting via the exhaust injection bend. From the injection bend the seawater falls into the waterlock and is then blown by the engine exhaust through a 'gooseneck' and out of the stern of the boat. The engine cooling has a closed circuit that uses a coolant solution of 30 > 50% Anti-freeze and 70 < 50% fresh water. This coolant circulates round the engine collecting heat and transfers the heat to the seawater in the heat exchanger as it circulates around the outside of the cupronickel 'tubestack' pipes.

When leaving the vessel for an extended period: turn off the sea-cock if heat exchanger cooled and isolate the starter battery.

HEAT EXCHANGER COOLING - WET EXHAUSTS

Three major problems that can easily occur when installing a heat exchanger engine in a vessel which need to be managed to ensure the engine is not subjected to any possible 'hydraulic lock'. This occurs when water is allowed to enter the combustion chamber and 'hydraulics' against the rising piston with the consequences possibly being, a bent con rod/s, an emulsified engine oil and/or a damaged fuel pump.

- Seawater syphoning past worn impellers in the seawater pump, flooding the exhaust system, and back filling into the combustion chamber when the engine is stopped.
- Seawater washing into the combustion chamber from the exhaust system due to either a very shallow exhaust run from the injection bend to the waterlock silencer, or because the waterlock silencer is too small to accept the total amount of cooling water in the exhaust hoses, or both. This can happen when the vessel is sailing into a big sea and a surge is set up in exhaust system as the vessel pitches - with the engine switched off.
- Waves forcing water up the exhaust due a poorly designed system with no 'gooseneck'. Small work boats moored on exposed beaches are very vulnerable to this as waves hit the stern before the boat can swing into the wind on a rising tide.

If the engine is installed below the water line, the potential for water entering the engine is considerably increased. The important dimension that must be measured is from the normal 'static' sea level to the point at where the cooling water is injected into the exhaust - this should be a minimum of 30 cms. If this can not be achieved the following options must be taken. Please refer to images 14, 15 & 16.

14 Standard Exhaust System

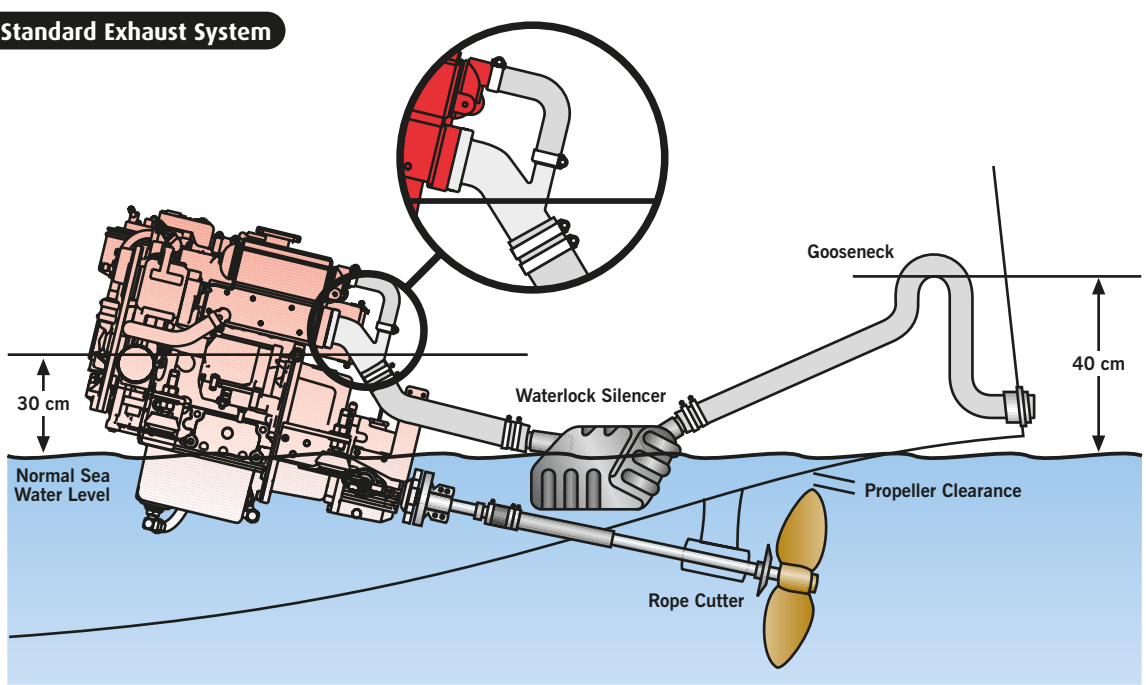

HIGH-RISE EXHAUST

If the standard injection bend is too low then Beta Marine offer high-rise injection bends that may add either 15 cms or 20 cms to the height.

If it is still not enough then an 'antisyphon'/vacuum valve must be fitted 50 cms above the 'loaded' water line sea level. Please refer to image 16.

15 Exhaust with High Rise

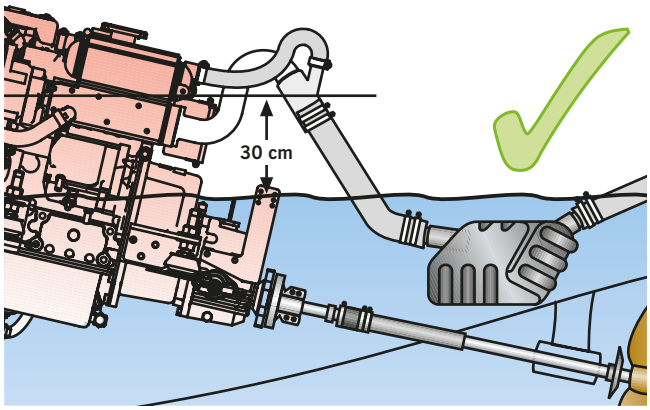

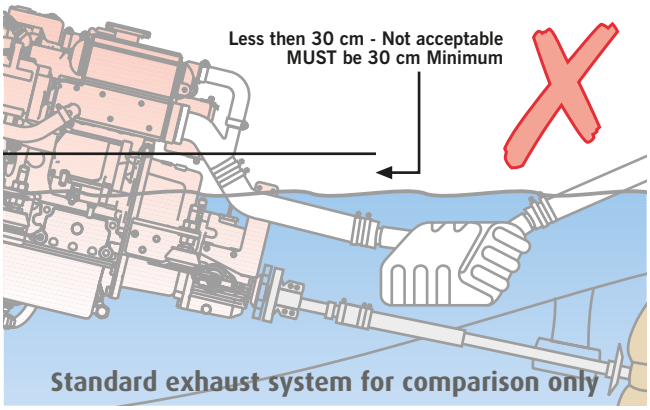

EXHAUST WITH ANTI-SYPHON VALVE

When fitting an anti-syphon valve to a vessel, it must be mounted as near as possible to the centerline so that there is no possibility that the valve goes under the water line when the yacht heels over.

IMPORTANT!

Anti-syphon valves need to be checked regularly as they can be accustomed to block up with salt crystals over time.

16 Exhaust with Anti-syphon Valve

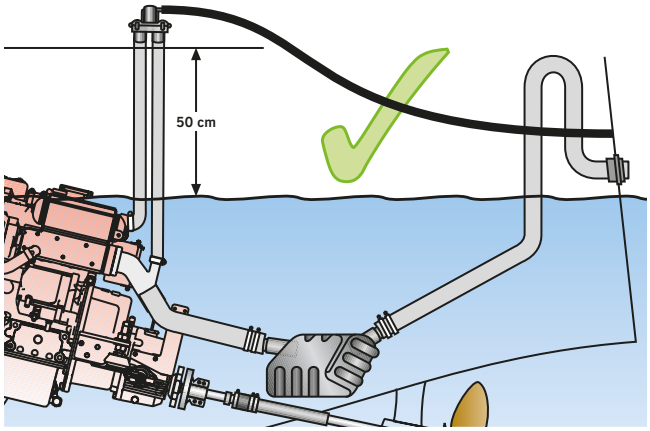

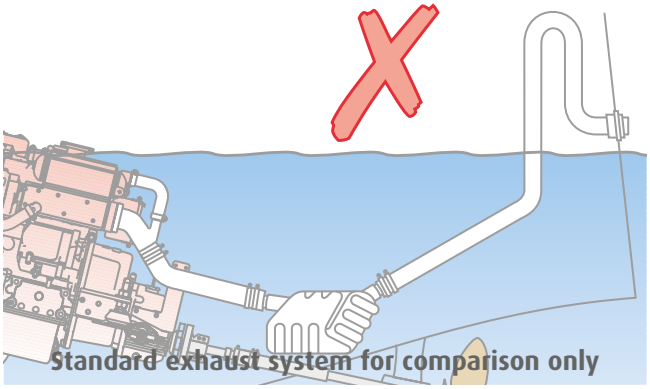

WATERLOCK/SILENCER

17 Waterlock/Silencer Positioning

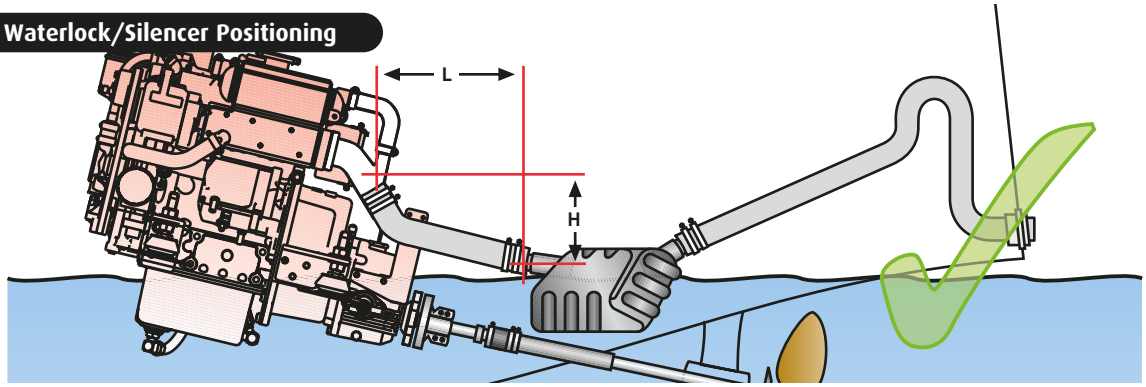

Always fit a waterlock/silencer to stop any water in the exhaust system back filling the engine. The water lock should always be fitted at least 30 cms away from the injection bend and at least 30 cms below the injection bend, being as low as practically possible, so that all the water can drain down into it. The waterlock should have sufficient capacity to hold an exhaust system full of water - draining into it.

Always create a 'gooseneck' with the exhaust hose (or purchase a propriety one) by raising the exhaust hose 40 cms above the waterline before exiting the transom at least 5 cms above the waterline. This will stop any waves pushing seawater down the exhaust.

Position of silencer in relation to exhaust hose length:

Length (L)	Height (H)
30 cm	30 cm
120 cm	40 cm

⚠ IMPORTANT!

If measurement 'H' cannot be met, a high rise exhaust injection bend must be installed so that any residual water flows/drains into the waterlock/silencer or overboard.

18 Exhaust Hose 'Gooseneck'

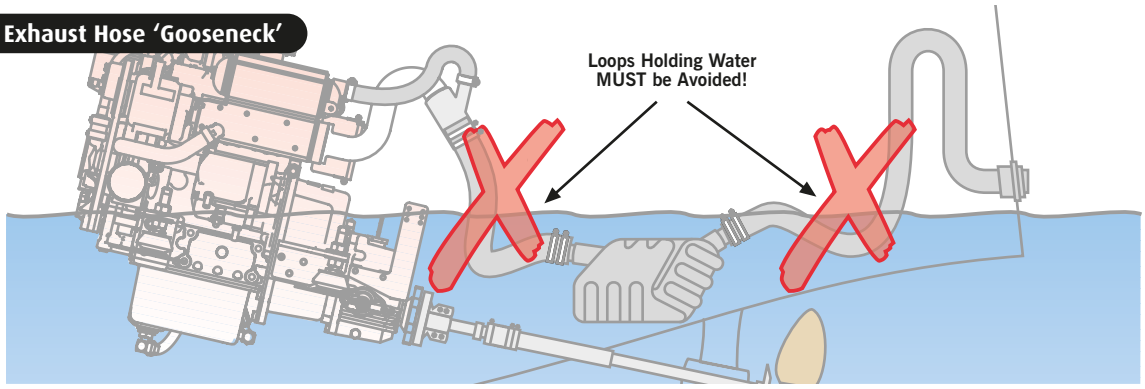

With longer lengths of exhaust hose you may need to support the hose to avoid a drooping hose and water build up.

19 Exhaust 'Gooseneck'

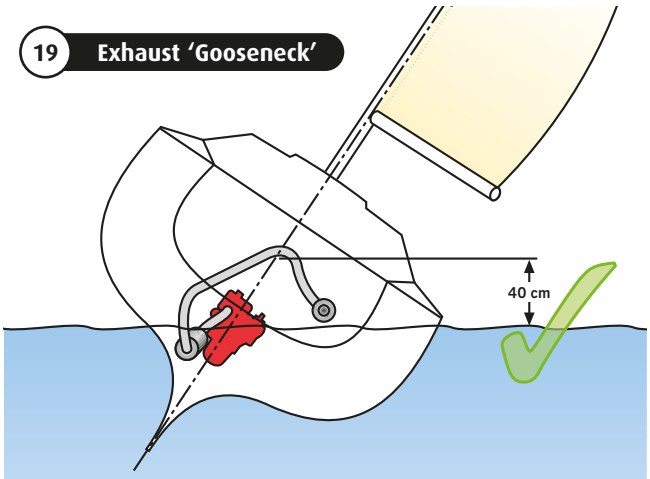

EXHAUST HOSE

Wet exhaust hose should be matched to the injection bend diameter. An engine correctly installed in accordance with this handbook will meet the emission requirements of the RCD (Recreational Craft Directive).

Engine	Hose I.D
Beta 10 to 60	50 mm
Beta 45T, 75 & 90	60 mm
Beta 70T	76 mm
Beta 85T, 90T, 105T & 115T	90 mm

EXHAUST BACK PRESSURE

Exhaust back pressure should be as low as possible; it is increased by long exhaust length and sharp bends. Keep exhaust systems to a minimum length and have gradual bends avoid tight angled elbows. Back pressure should be measured with the complete exhaust system connected and the engine running at service speed. The correct measuring point is before the injection bend (at the manifold flange).

Engine	Exhaust Back Pressure
Beta 10 to 25	Max. 70 mm Hg
Beta 30, 35, 38, 45T, 50 & 60	Max. 80 mm Hg
Beta 75 & 90	Max. 90 mm Hg
Beta 70T, 85T, 90T, 105T & 115T	85 to 115 mm Hg

SEA WATER INLET FOR HEAT EXCHANGER COOLED ENGINES

Beta Marine engines are fitted with a gear driven sea water pump which sucks in seawater (raw water) to cool the closed circuit system via the heat exchanger.

1. It is very important that the seawater inlet should have a strainer system either **'A'** built into the sea cock, or **'B'** a high level system with visual inspection glass (please refer to image 20) mounted just above the water line.

Engine	Seacock Inlet/Seawater Pump Hose I.D
Beta 10, 14, 16, 20, 25, 30, 35 & 38	Min. 19 mm
Beta 45T, 43, 50 & 60	Min. 25 mm
Beta 70T, 75, 85T, 90, 90T, 105T & 115T	Min. 32 mm

20 Sea Water Inlet/Filter

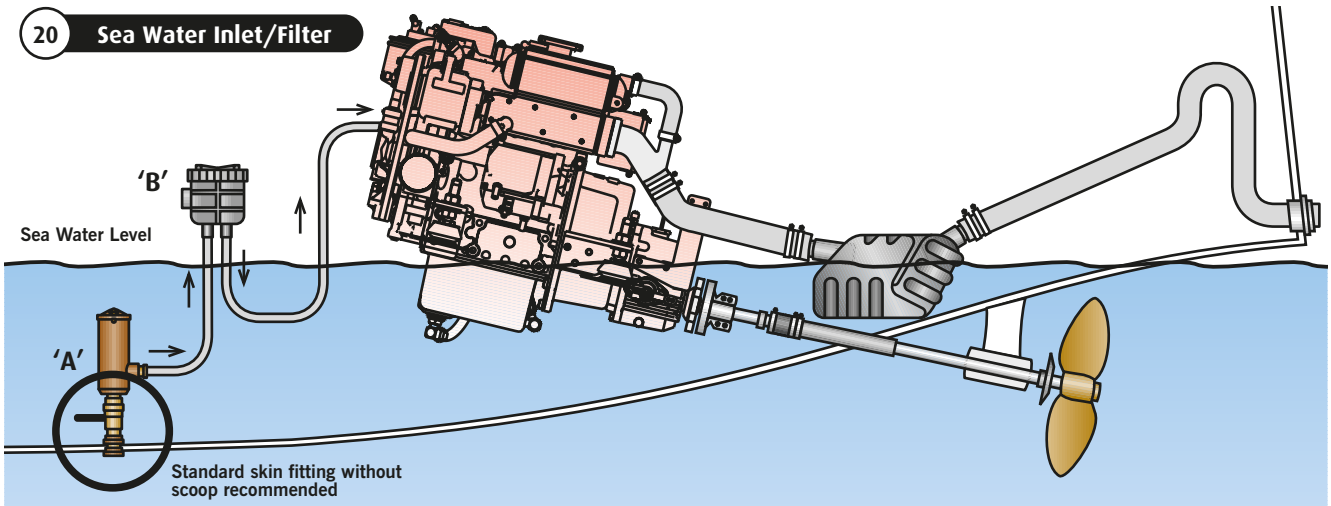

2. Good access to the inlet sea cock from inside your boat is essential so that debris or seaweed trapped in the intake can be removed.
3. All pipe work should have approved marine grade stainless steel hose clips. Any loose clamps or bad connections can cause flooding and sinking of the vessel. It is accepted practice that two stainless steel clips should be used at each end of raw water pipes for security. Ensure that you use the correct grade of hose.

NB:

- The maximum lift of the sea water pump is 2m when primed.
- The water intake hose must be a reinforced type so that it does not collapse under suction.

4. A normal inlet sea cock type **'A'** is recommended as this can be 'rodded out' to remove blockages, please refer to image 20.

   We do not recommend the use of 'scoop' type water pickups, because if fitted the wrong way around the water will be forced through the pump and into the exhaust system whilst the vessel is sailing. This is very dangerous as the exhaust will eventually fill and sea/raw water will back up into the engine through the exhaust valve. Catastrophic failure will result as soon as the engine is restarted. Please refer to image 21.

21 Sea Water Inlet - Scoop

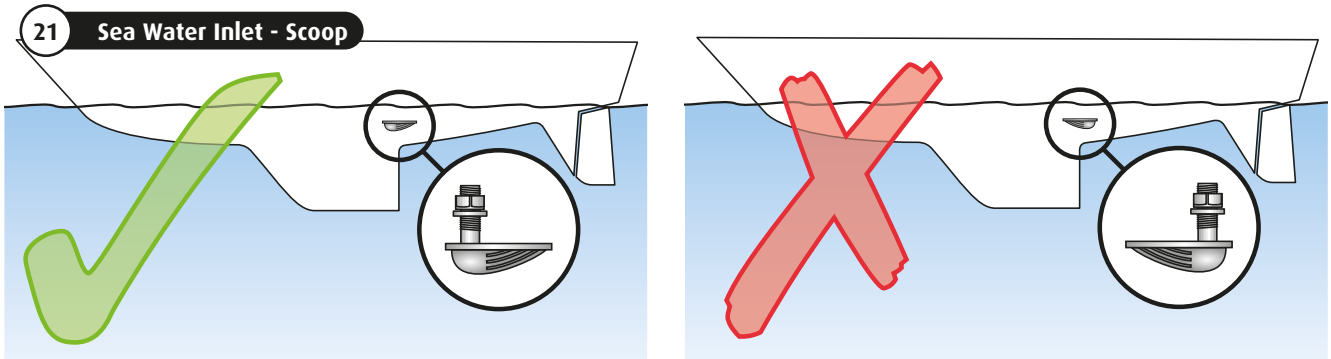

PROPELLER CLEARANCE

There must be a propeller clearance between the tip of the propeller blade and the underside of the hull.

This should be a minimum of 10 < 15% of the diameter of the propeller to reduce 'tip noise'.

22 Propeller Clearance

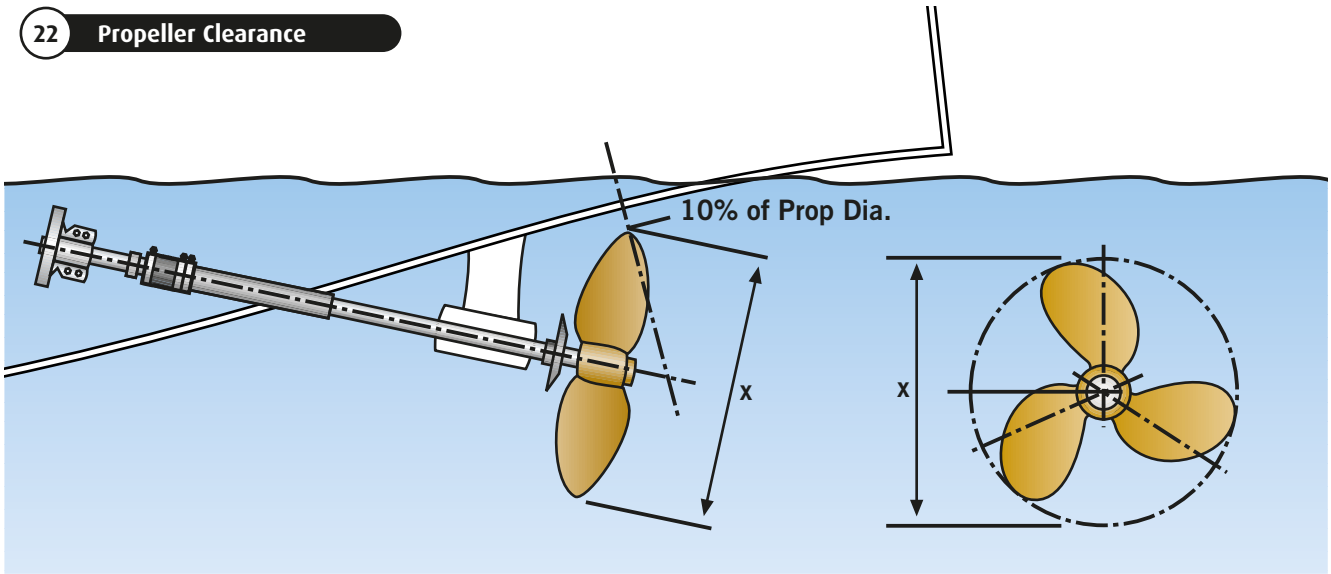

STERN GEAR LUBRICATION

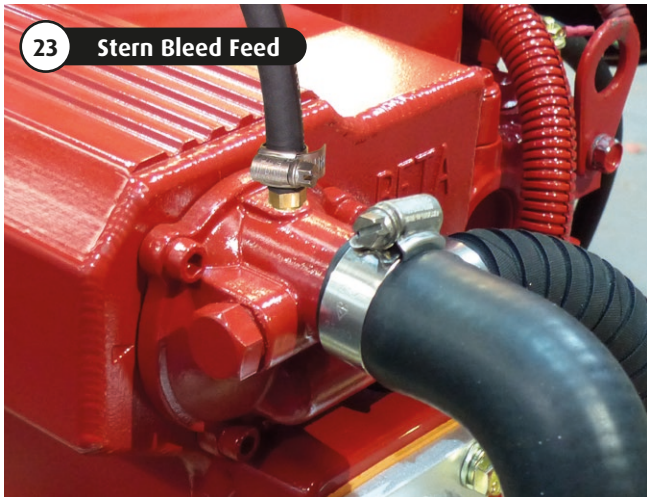

23 Stern Bleed Feed

⚠ IMPORTANT! - ENGINE COOLING

If a 'water feed take off' is required for stern gear lubrication of the cutlass bearing or if you have an anti-syphon valve with 'continuous bleed', then the connection must be taken **after** the heat exchanger (**not** before) and the maximum size should be an $^{1}/_{8}$" BSP fitting with a 5mm hose.

(Installations that have excessive water 'bleed' will effect combustion temperatures and exhaust emissions; and taken to the extreme could either seize the engine and/or melt the exhaust system).

24 Standard Exhaust with Stern Bleed

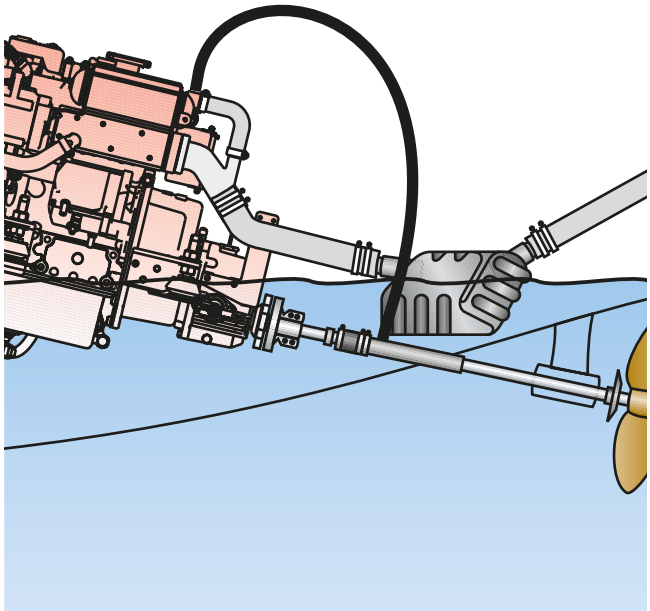

Beta 10 to Beta 60 - stern bleed kits ordered with an engine are factory fitted. If a stern bleed kit is retrospectively being fitted, the heat exchanger end cap will require drilling and tapping. Please refer to image 23.

25 Stern Bleed with Anti-syphon Valve

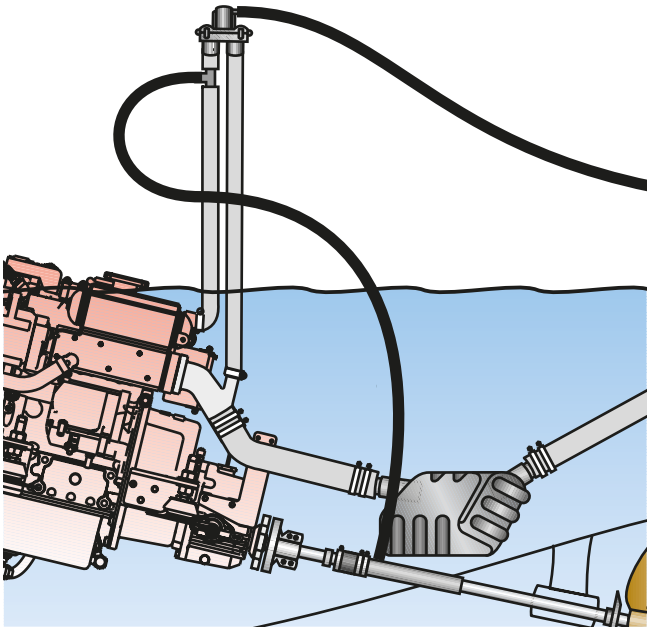

Beta 75 upwards - need a 'T' piece with an $^{1}/_{8}$" BSP connection fitted just after the heat exchanger as shown in the drawing. It is important that this 'feed' is taken from the engine side of an anti-syphon valve or you can 'hydraulic lock' the engine with catastrophic results.

26 Fuel/Water Separator

WARNING!

Always fit a fuel/water separator in the fuel supply system. Water in the fuel can seriously damage the injection system.

- If a fuel supply shutoff valve is fitted do not use a taper tap, only use a ball valve tap. The ball valve type are more reliable and less likely to let air into the fuel system.
- Be sure to use a strainer when filling the fuel tank. Dirt or sand in the fuel may cause trouble in the fuel injection pump.
- Always use diesel fuel. **Do not use paraffin/ kerosene**, as this has a low cetane rating and adversely affects the engine.
- Biodiesel fuel can be added to the normal diesel fuel up to a maximum limit of 7% without affecting the warranty.
- Most diesel fuels now contain up to a maximum limit of 7% Biodiesel and this does not affect the engine warranty. The recent changes to fuel specifications allow the addition of FAME (fatty acid methyl ester) Biodiesel EN14214:2009, to diesel fuel, but please be aware that Biodiesel does allow bacteria to grow more easily in the fuel and this can clog your fuel tank, pipes and filters. If you experience an outbreak of bacterial growth you can either empty and clean out your fuel pipes and tank, or use biocide additives and filtering.
- Low sulphur diesel fuel - regulations changed recently reducing the sulphur content by 99%, in many countries. The European standard is EN590:2009, and in the USA ASTM D975-09. The engine is designed to run on low sulphur fuel, and this is now preferred.
- If you use a higher percentage of Biodiesel fuel you must fit an electric lift pump into the fuel supply line, and the fuel filter and oil filter must both be changed together when the oil filter is normally replaced.

IMPORTANT!

Beta Marine warranty will not cover fuel equipment when more than 7% Biodiesel is used.

- Be careful not to let the fuel tank become empty, or air can enter the fuel system, necessitating bleeding before next engine start.
- The engine mechanical fuel lift pump will only lift fuel through 0.25m. If this is insufficient then an electric fuel lift pump must be fitted.

FUEL SUPPLY & LEAK OFF

27 Fuel Supply and Leak Off

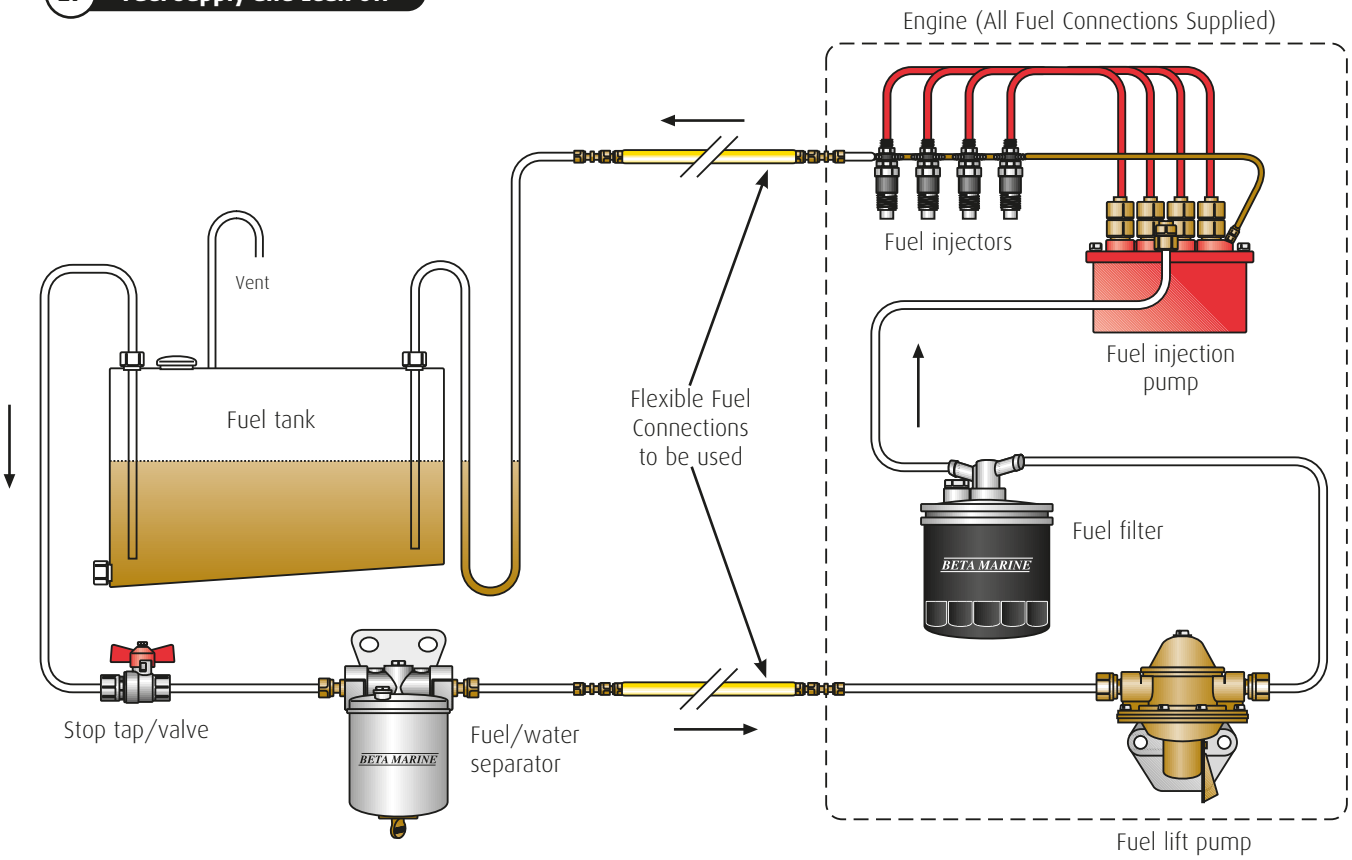

NOTES:

1. **A fuel/water separator must be installed.**
2. The mechanical fuel lift pump is fitted to all engines as standard, but if a suction head of 0.25m or more is required, then an electric fuel lift pump must be fitted.
3. It is very important that the excess fuel from the injectors is fed back to the fuel tank and not back to any point in the supply line. This will help prevent air getting into the system.
4. The fuel return (leak off) pipe must loop down to be level with the bottom of the tank before it enters the top of the tank, please refer to image 27. This prevents fuel 'drain down'.
5. Fuel lines and hoses connecting the fuel tank to the engine, must be secured, separated and protected from any source of significant heat. The filling, storage, venting, fuel supply arrangements and installation must be designed and installed so as to minimise the risk of fire. When connecting the engine to the fuel supply and return lines, marine grade flexible fuel hoses are highly recommended.
6. Any fuel leaks in the system when static are likely to cause poor starting and erratic running and must be corrected immediately. These leaks will allow air to be sucked in when the engine is running.

FUEL CONNECTIONS

Engine Connector	Hose O.D
Fuel supply and leak-off connections are 8 mm conex with olives	8 mm O.D

CALORIFIER CONNECTIONS

Engines can be fitted with optional calorifier connections so that the engine coolant circuit is allowed to flow through a calorifier tank to heat water for domestic use. Typical calorifier circuits and connection locations for heat exchanger engines are shown below. When installing please note:

1. For a calorifier to operate it is essential for all the air to be removed from the system.
2. If the calorifier tank or pipework is fitted above the heat exchanger then you will need to fit a remote header tank slightly above the calorifier tank.
3. Keep the supply pipe either horizontal or sloping down in a continuous fall towards the calorifier. The return pipe should also be either horizontal or sloping down in a continuous fall towards the engine to avoid air pockets being created.
4. Extra care must be taken when first connecting the calorifier system to the engine as the coolant level in the heat exchanger will drop as the circuit is filled. Once connected fill the coolant level as described in 'Filling The Fresh Water System' then run the engine off load for 10 minutes. Allow to cool to a safe temperature, then re-check the level and top up as necessary. Check the calorifier feed pipe to see if it is starting to warm. Run the engine for another ten minutes then repeat this process until the coolant level remains stable.
5. If the coolant level is steady but no warm water is arriving into the calorifier then (stop the engine and once suitably cooled down) using appropriate personal protective equipment carefully remove the heat exchanger pressure/filler cap. Refer to the calorifier manufacturers instructions, then open the calorifier bleed valve and allow all air to escape before refastening. If no bleed valve is provided loosen the clip which secures the supply pipe to the calorifier and allow all air to escape before refastening. Repeat step 4.

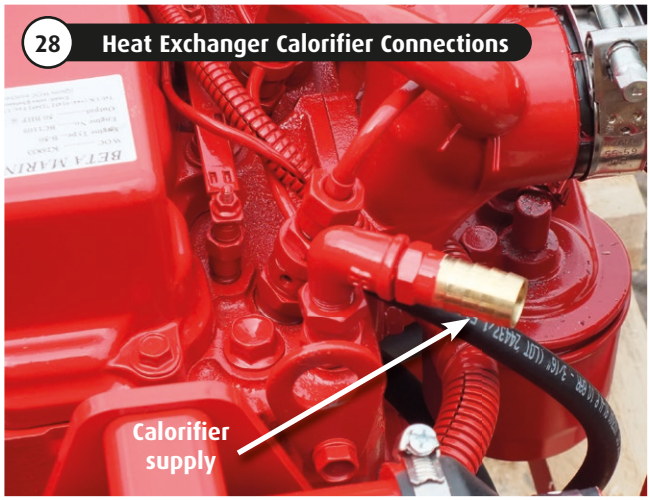

28 Heat Exchanger Calorifier Connections

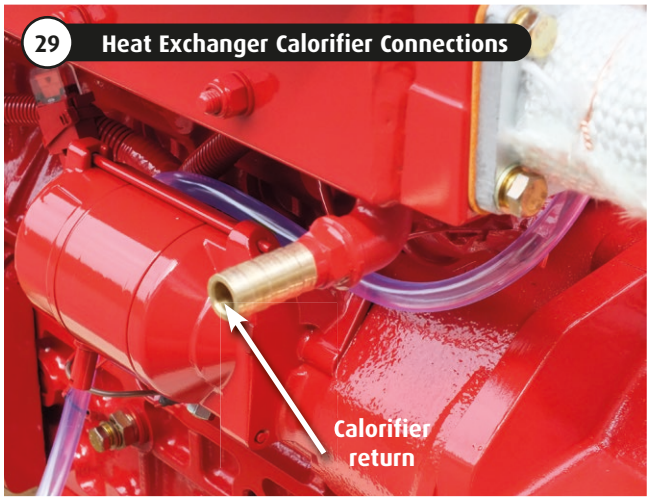

29 Heat Exchanger Calorifier Connections

The calorifier connection will be located as follows:

Calorifier Supply:

Beta 10, 14, 16, 20, 25, 30, 35, 38, 45T, 43, 50 & 60
Aft engine block top, starboard side when viewed from the gearbox end.

Beta 70T & 85T
Forward end, port side when viewed from the gearbox end.

Beta 75, 90, 90T, 105T & 115T
Front of the engine, starboard side when viewed from the gearbox end.

Calorifier Return:

Beta 10, 14, 16, 20, 25, 30, 35, 38, 45T, 43, 50 & 60
Exhaust end, port side under the heat exchanger when viewed from the gearbox end.

Beta 70T & 85T
Mid engine, port side under the heat exchanger when viewed from the gearbox end.

Beta 75, 90, 90T, 105T & 115T
Front of the engine, starboard side when viewed from the gearbox end.

⚠ CAUTION!

TO AVOID PERSONAL INJURY: Do not do this when the engine is hot as scalding hot water may be forced out of the pipe under pressure.

Calorifier Connector Hose I.D
Require $^{5}/_{8}$" / 15 mm I.D

30 Heat Exchanger Calorifier System

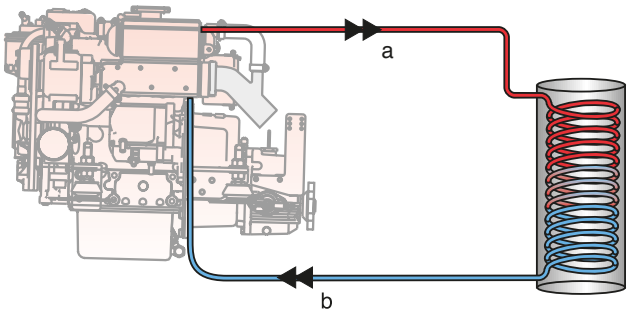

ENGINE COOLANT REMOTE HEADER EXPANSION TANK KITS

31 Expansion Tank Kit

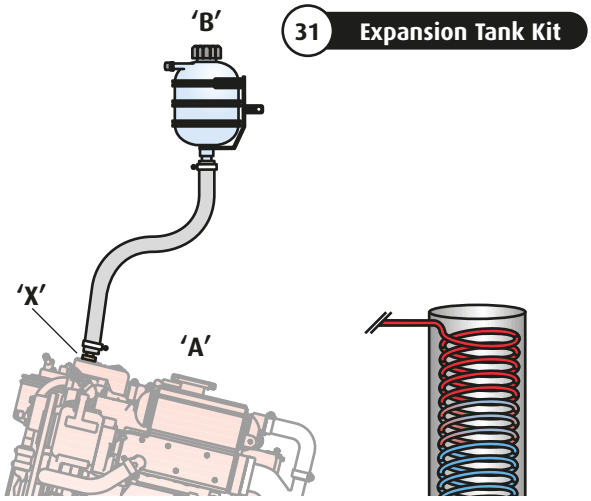

32 Expansion Tank Kit

If the calorifier position is partly above the engine it will be necessary to install a remote header expansion tank in a position higher than it.

Remote header expansion tank kit – when ordered with an engine or generating set, the kit is supplied loose but the required $^{3}/_{8}$" BSPT is pre-installed ready for connection. If a kit is retrospectively being fitted, the engine thermostat housing will require drilling and tapping $^{3}/_{8}$" BSPT to enable the $^{3}/_{4}$" hose tail to be connected **'X'**.

'A' - The heat exchanger pressure cap must always be Beta Marine, P/N 209-80130 rated @ 13 PSI.

'B' - The remote header expansion tank pressure cap must always be Beta Marine, P/N 209-03066 rated @ 22 PSI.

NB: When filling or topping up the coolant system, always fill point **'A'** before point **'B'**.

⚠ IMPORTANT!

When a remote header tank expansion kit is initially installed the tank will require to be re-calibrated.

Refer to and follow preceding CALORIFIER CONNECTIONS and following FILLING THE ENGINE COOLANT SYSTEM overleaf first.

Once completed and the engine, calorifier system and expansion header tank are all fully cooled additionally:

Mark the level that is now in the expansion header tank to use as a reference for the correct "Normal" coolant level.

ENGINE COOLANT

The coolant solution must be a mixture of 70 > 50% fresh water and 30 < 50% anti-freeze. This requirement also applies to warm and tropical climates as the solution additionally helps to prevent overheating and corrosion forming within the engine cooling circuit. The anti-freeze in the fresh water system enables the boiling point of water to rise to 124°C with a 13 psi pressure cap fitted. The water temperature alarm switch will however be activated at 95°C to 100°C. If no anti-freeze or a very weak solution is used, then the water temperature switch may not be activated before coolant is lost. Warranty is invalid if the correct percentage/ratio is not used.

IMPORTANT!

Always use a Mono Ethylene Glycol Based Extended Life Anti-freeze must be a mixture of 30 < 50% anti-freeze and 70 > 50% fresh water.

IMPORTANT!

Do not exceed an Antifreeze mix greater than 50%, as the engine cooling efficiency will be detrimentally affected.

FILLING THE ENGINE COOLANT SYSTEM

WARNING!

New engines are supplied with the engine coolant drained off.

To initially correctly fill the engine closed circuit coolant system:

a) Check that the coolant drain tap or plug is turned off. Please refer to image 33.

b) Fill engine with a correctly mixed engine coolant through the top of the heat exchanger. Please refer to image 34.

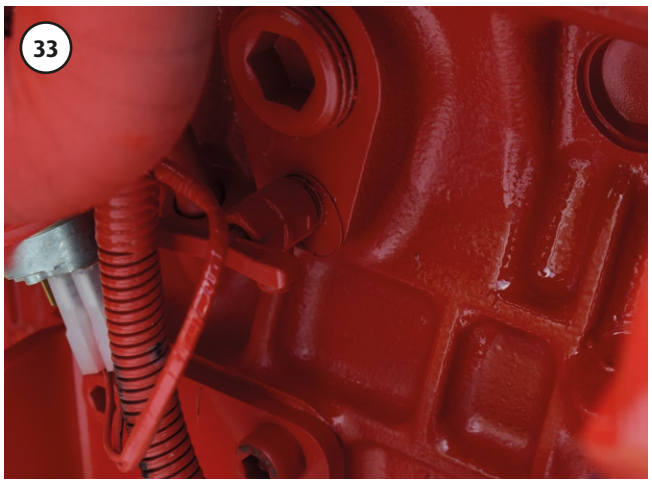

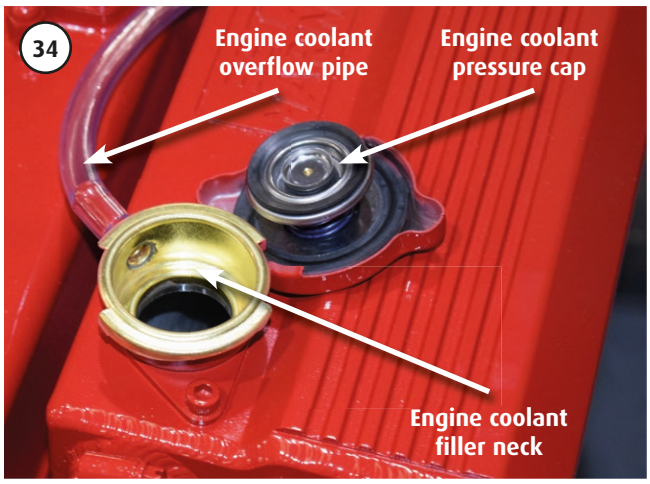

Coolant drain taps are located:

Beta 10, 14, 16, 20 & 25
Mid engine, starboard side when viewed from the gearbox end.

Beta 30, 35, 38 & 45T
Forward end, port side when viewed from the gearbox end.

Beta 43 & 50
Forward end, starboard side when viewed from the gearbox end.

Beta 60
Is not equipped with an engine coolant drain tap. Please refer to page 35.

Beta 70T & 85T
Forward end, port side under the heat exchanger when viewed from the gearbox end.

Beta 75, 90, 90T, 105T & 115T
Aft Engine, starboard side when viewed from the gearbox end.

c) Fill heat exchanger to the **top of the filler neck** and replace cap. Press down firmly on filler cap and hand tighten in a clockwise direction.

d) Run the engine for 5 minutes on no load (out of gear), then stop the engine, release the filler neck pressure cap to remove any air from the system, remove the cap and check the level. Top up coolant to the filler neck and replace the filler pressure cap.

e) Check the cooling system for leaks.

f) If a calorifier is fitted care must be taken to see that this is also full of coolant and all the air is bleed from the calorifier circuit. Please refer to points 4 & 5 within 'Calorifier Connection' on page 32.

g) Preferably with the vessel tied up, run the engine on $^1/_3$ load (in gear) for 15 minutes, as the system initially warms up excess engine coolant will be leaked off from the overflow pipe into the bilge*. Stop the engine and allow the engine to fully cool down before removing the pressure cap and topping up the engine coolant to **25 mm/1" below** the filler neck.

*Subject to installation it maybe possble to place a drip tray or container to catch coolant overflow.

h) Repeat (g) if engine coolant level is greater than 1 inch below the base of the filler neck when the engine has cooled down top up to level to 1 inch below.

i) Check the cooling system for leaks.

j) Re-run the engine on $^2/_3$ load (in gear) for 20 minutes, check for leaks and repeat (h) & (i).

⚠ IMPORTANT!

The engine thermostat starts to open at 71°C, as a consequence, the guide running temperature should be between 71 > 85°C.

k) **Coolant should be drained off every 2 years and replaced with a new solution.**

NB: When draining the engine coolant system, ensure the engine has cooled sufficiently to prevent scalding from hot pressurised water. Prior to draining a cold engine, remove the filler cap from the heat exchanger (please refer to image 34) and then open the water drain tap (please refer to image 33). This allows the water to drain freely from the system.

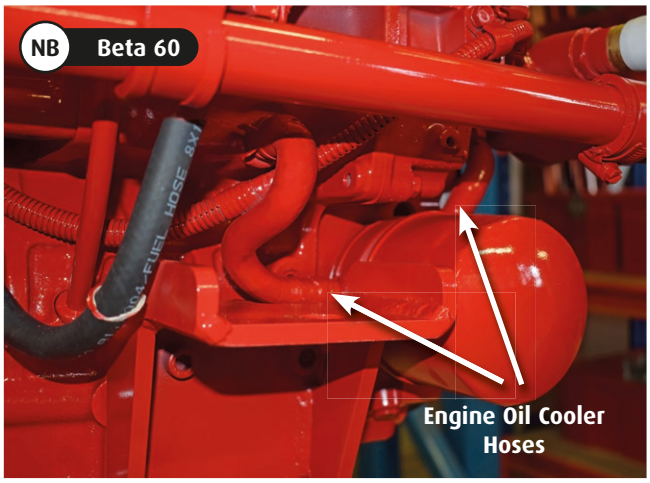

NB Beta 60: Is not equipped with a coolant drain tap and will require a engine oil cooler hose to be disconnected in order to drain of the engine coolant. Either hose can be disconnected. Please ensure they are reconnected before refilling the engine coolant.

⚠ CAUTION!

TO AVOID PERSONAL INJURY:

Engine Coolant Pressure Cap

Removal of the pressure cap when the engine is hot can cause severe injury from scalding hot water under pressure, always allow the engine to fully cool.

Using appropriate personal protective equipment turn the cap anti-clockwise to the stop, this allows pressure to be released. Then press firmly down on the cap and continue to turn anticlockwise to fully release the cap.

To re-fit the cap align its tangs with filler neck, press down and firmly turn the cap clockwise until it fully meets the stop position.

BATTERY INSTALLATION

Starter batteries and battery cables are a major consideration for engine starting systems. Incorrect selection of both battery and cables is a major cause of starting failure.

BATTERIES

1. Battery sizes: For starter battery capacity recommendation please refer to 'Technical Specifications' on pages 7 to 17.
2. In extreme conditions, low temperatures, battery capacity needs to be increased as performance will decrease. This needs to be allowed for during selection of a battery.
3. Battery terminals and connections must always be kept clean, in good condition and tight. Faulty connections can lead to poor performance and/or in extreme conditions explosion.
4. Batteries must be in good condition and must hold voltage. When measured, an idle standing battery would be expected to be read a minimum of 12.6 volts and 12 volts on the starter motor terminals.
5. Charging circuits must be sufficient for the battery system used. Ensure you have enough battery capacity whilst considering the recharge capability. Depending upon the battery type the recharge voltage will be in the region of 14.7 volts.

⚠ WARNING!

Under no circumstances should the battery be disconnected or switched off when the engine is running. This will seriously damage the engine starter battery alternator.

⚠ IMPORTANT!

Batteries should be protected from any possible ingress of water, firmly secured and have a battery isolation switch fitted to the positive cable before it reaches the engine.

BATTERY CABLES

1. Battery cables are sized on the motoring or rolling current of the starter motor and the length of battery cable run. This length is the total distance of both the positive and negative cables added together. Under normal circumstances the voltage drop in the starter battery cable circuit should not exceed 0.8 volt and in any circuit should not exceed 1.2 volts.
2. Starter batteries should be as close to the engine as practically possible. The reason for this is to ensure that the maximum voltage from the battery is available to the starter motor. The longer the cable run the more the voltage drop will be, due to resistance within the cables.
3. For smaller engines we recommend battery cables of 25mm^2 (4 AWG) conductor cross sectional area with length up to 1.5m per cable. This equals a cable run of 3m total which would have a voltage drop of 0.8 volts if the starter motor was using 160 amps when motoring. Battery cables that are too small will overheat and their insulation could catch fire.
4. When the supply is switched on to the starter motor there will be a massive inrush of power in the region of 5 times the motoring current. The battery will be expected to supply this inrush and then recover sufficiently to give the motoring current (often refered to the 'rolling' or 'cranking' current). If the correct battery is selected but the engine will not crank at sufficient speed after the inrush then (assuming battery cables are the correct size) the battery is either discharged or faulty.
5. If the voltage at the starter motor terminals after the inrush is not at least 10.5 volts it is likely that the motor will either crawl at insufficient speed or not turn at all. Battery cables could overheat.
6. Please note that cranking time should be no longer than 10 seconds with at least a 10 second rest between attempts.

25mm² (4 AWG) Cable

Engine	Cranking Amp	Cable Volt drop*	Max length, both cables added together
Up to Beta 45T	100	0.00017V	4.7m
Up to Beta 50	120	0.00017V	3.9m
Up to Beta 60	170	0.00017V	2.8m
Up to Beta 115T	210/250**	0.00017V	Not suitable

35mm² (2 AWG) Cable

Engine	Cranking Amp	Cable Volt drop*	Max length, both cables added together
Up to Beta 45T	100	0.00013V	6.2m
Up to Beta 50	120	0.00013V	5.2m
Up to Beta 60	170	0.00013V	3.6m
Up to Beta 115T	210/250**	0.00013V	2.5m

70mm² (2/0 AWG) Cable

Engine	Cranking Amp	Cable Volt drop*	Max length, both cables added together
Up to Beta 45T	100	0.000063V	12.7m
Up to Beta 50	120	0.000063V	10.5m
Up to Beta 60	170	0.000063V	7.5m
Up to Beta 115T	210/250**	0.000063V	5.0m

* Voltage drops for pvc insulated cables are ex table 9D1 of the IEE Wiring Regulations.
** Varies between models and builds.

The above tables are based on a maximum conductor temperature of 70°C in an ambient temperature of 30°C.

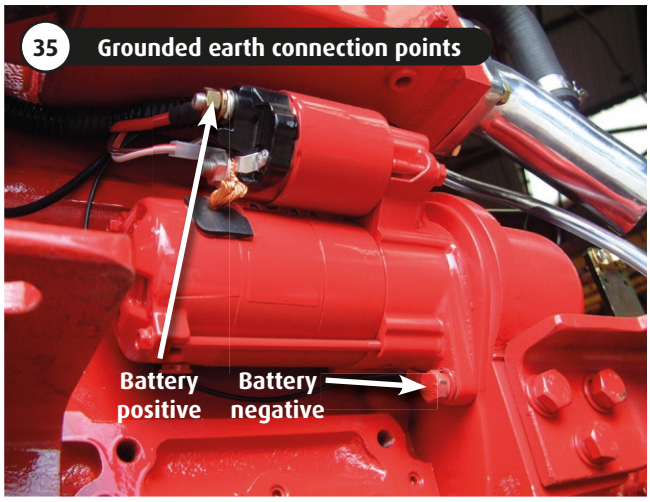

Battery connection location for all variants (excluding Beta 70T & 85T)
Port side, near the engine starter motor, when viewed from the gearbox end.

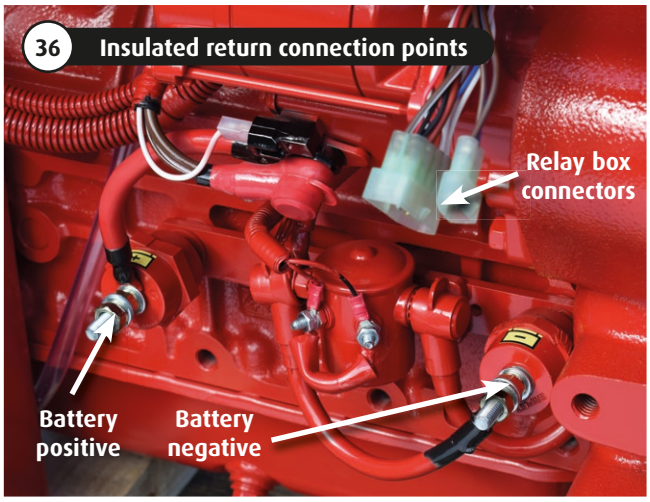

Battery connection location for Beta 70T & 85T
Starboard side when viewed from the gearbox end.

BATTERY CHARGING

For efficient charging of the batteries we recommend setting the engine to a minimum of 1,200 rpm when charging out of gear until the battery/ies are fully charged.

This also applies for AC generation through an inverter.

Charging below 1,200 rpm risks damage.

37

BETA MARINE

IMPORTANT

When battery charging and/or generation AC the engine must be run at 1200rpm

OTHERWISE DAMAGE MAY OCCUR

ENGINE LUBRICANT

WARNING!

New engines are supplied with the engine lube oil drained off.

Engine oil: Engine oil quality should have the minimum properties of the American Petroleum Institute 'API' classification **CF** with multi-grade SAE ratings as listed in the following table.

NB: An acceptable alternative is a mineral based, semi-synthetic lubricating oil with a content mix no greater than 30% being synthetic based.

The adjacent table gives grades of oil viscosity required for various ambient temperature ranges.

Ambient Temp.	Multi-Grade
-30°C to 0°C	SAE 10W/30
-15°C to +15°C	SAE 15W/40
0°C to +30°C	SAE 15W/40
25°C and above	SAE 15W/40

IMPORTANT!

- **Do not mix two different types of oil or SAE rating.**
- **Do not use lubricant additives and/or fully synthetic lubricating oil.**

FILLING THE ENGINE WITH OIL

For quantities of oil required please refer to pages 7 to 17. When checking the engine oil level, do so before starting, or more than five minutes after stopping.

1. To check the oil level, draw out the dipstick, wipe it clean, re-insert it, and draw it out again, please refer to image 38. Check to see that the oil level lies between the two notches.
2. If the level is too low, add new oil to the engine to the specified level, please refer to image 39.

When using an oil of a different make or viscosity from the previous one, drain out the old oil. **Never mix two different types of oil.**

Engine oil should be changed after the first 50 hours running time and then every year or every 250 hours if sooner.

⚠ IMPORTANT!

Over-filling your engine with oil can be as detrimental as under-filling.

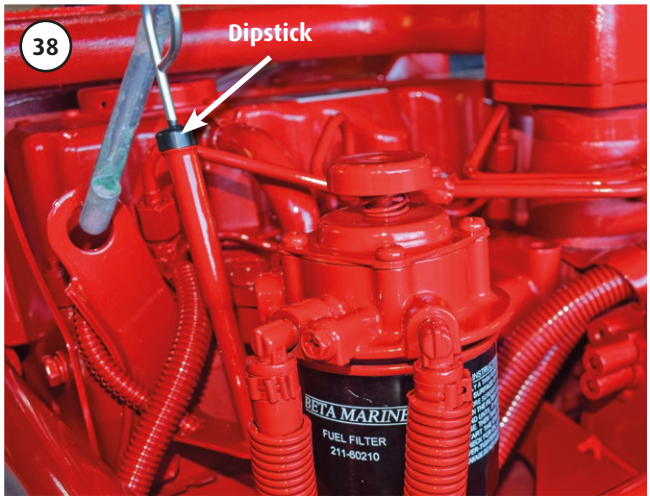

As standard the dipstick will be located:

Beta 10, 14, 16, 20 & 25
Aft engine, starboard side when viewed from the gearbox end.

Beta 30, 35, 38 & 45T
Forward end, port side when viewed from the gearbox end.

Beta 43, 50 60, 70T & 85T
Forward end, starboard side when viewed from the gearbox end.

Beta 75, 90, 90T, 105T & 115T
Aft engine, starboard side when viewed from the gearbox end.

BLEEDING THE FUEL SYSTEM

1. Bleeding the fuel system for initial start up.
2. The fuel system must have all the trapped air carefully 'bled' out; starting at the fuel tank and progressively working through to: the fuel/water trap, the fuel filter, to the fuel injection pump.
3. Open the fuel tank stop tap/valve and then bleed the fuel/water separator of air as shown in manufacturer's literature.
4. Fuel should now arrive at the fuel lift pump.
5. Open the fuel bleed bolt on top of the fuel filter by 1 to 2 turns, please refer to image 40 or 41.

⚠ CAUTION!

TO AVOID PERSONAL INJURY:

- **Do not bleed a hot engine as this could cause fuel to spill onto a hot exhaust manifold creating a fire.**
- **Do not mix petrol/gasoline or alcohol with diesel fuel. This mixture can cause an explosion.**
- **Fuel must be removed from skin to prevent infection.**

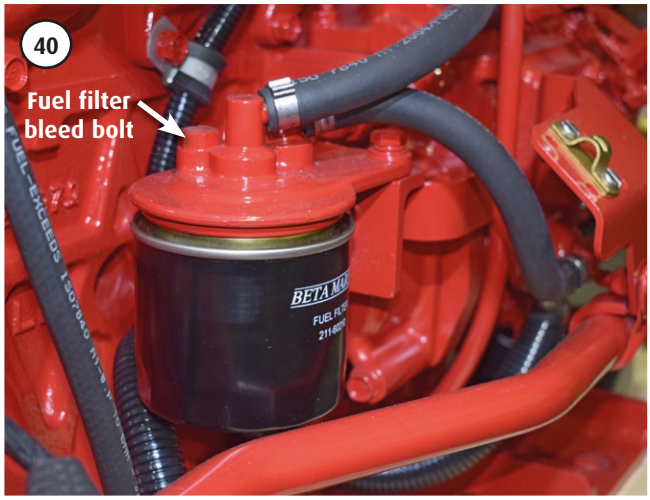

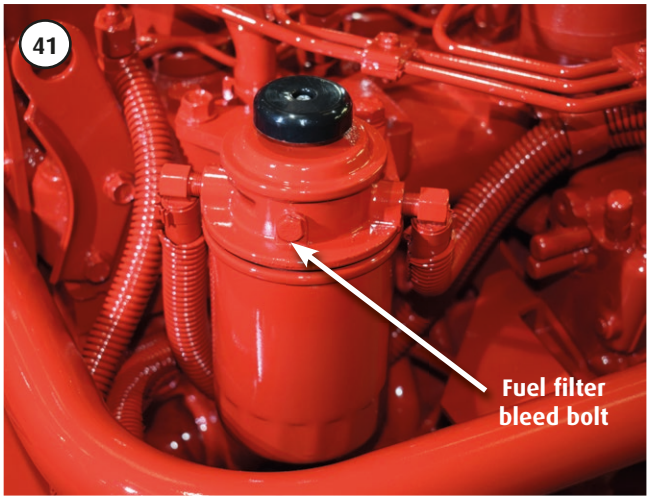

The fuel filter will be located:

All variants (excluding Beta 75, 90, 90T, 105T & 115T)
Forward end, starboard side when viewed from the gear-box end.

Beta 75, 90, 90T, 105T & 115T
Aft engine, starboard side when viewed from the gearbox end.

Depending on engine fuel filter type follow either steps 6 & 8 or steps 7 & 8.

6. Move the hand priming lever on fuel lift pump up and down (please refer to image 42) until fuel with "no bubbles" come out of the fuel filter bleed bolt (please refer to image 40). The hand priming lever normally has about 90° travel: **but the camshaft lobe may block this travel requiring you to rotate the engine crankshaft 90° to obtain full travel.**

7. Move the hand priming button on the fuel filter until fuel with "no bubbles" come out of the fuel filter bleed bolt, please refer to image 43.

8. Shut/tighten the fuel filter bleed bolt, please refer to image 40 or 41.

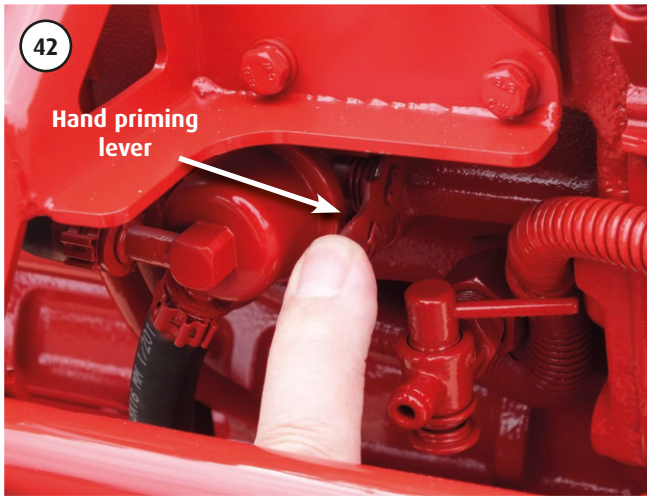

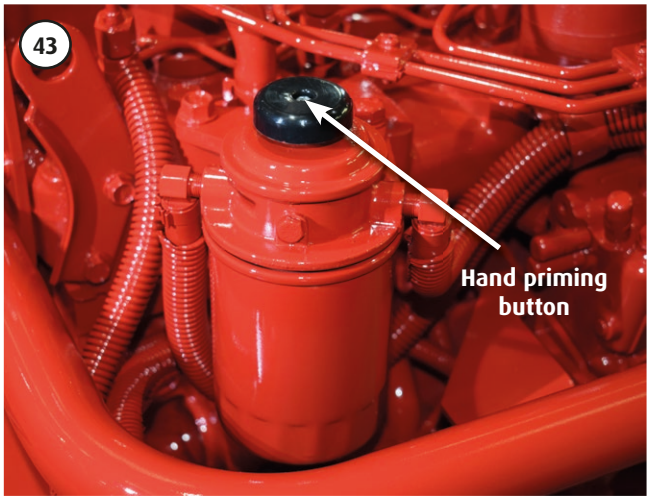

The hand priming lever or button will be located:

Beta 10, 14, 16, 20 & 25
Mid engine, starboard side when viewed from the gearbox end.

Beta 30, 35, 38 & 45T
Forward end, starboard side when viewed from the gear-box end.

Beta 43, 50 & 60
Mid engine, starboard side under the morse control bracket.

Beta 70T, 75, 85T, 90, 90T, 105T & 115T
The hand priming button is located on the top of the fuel filter assembly.

CONTROL PANEL OVERVIEW

BETA MARINE KEY SWITCH CONTROL PANELS

Optional Control Panel 'A'

Is key switch controlled for engine preheat & start, push button controlled for engine stop, has a green light indicator for 'power on', red warning light indicators & audible alarm for low oil pressure, high water temperature and engine alternator not charging.

Standard Heat Exchanger Control Panel 'ABV'

Is key switch controlled for engine preheat & start, push button controlled for engine stop, has a tachometer with running hour recorder, green light indicator for 'power on', red warning light indicators & audible alarm for low oil pressure, high water temperature and engine alternator not charging.

Optional Control Panel 'B'

Is key switch controlled for engine preheat & start, push button controlled for engine stop, has a tachometer with running hour recorder and a water temperature gauge. Green light indicator for 'power on', red warning light indicators & audible alarm for low oil pressure, high water temperature and engine alternator not charging.

Optional Control Panel 'C'

Is key switch controlled for engine preheat & start, push button controlled for engine stop, has a tachometer with running hour recorder, oil pressure, voltmeter & water temperature gauges. Green light indicator for 'power on', red warning light indicators & audible alarm for low oil pressure, high water temperature, domestic and or engine alternators not charging.

BETA MARINE PUSH BUTTON CONTROL PANELS

Optional Control Panel 'ABVW'

Is push button controlled for engine preheat, start & stop, has a tachometer with running hour recorder, green light indicator for 'power on', red warning light indicators & audible alarm for low oil pressure, high water temperature and engine alternator not charging.

Optional Control Panel 'BW'

Is push button controlled for engine preheat, start & stop, has a tachometer with running hour recorder and a water temperature gauge. Green light indicator for 'power on', red warning light indicators & audible alarm for low oil pressure, high water temperature and engine alternator not charging.

Optional Control Panel 'CW'

Is push button controlled for engine preheat, start & stop, has a tachometer with running hour recorder, oil pressure, voltmeter & water temperature gauges. Green light indicator for 'power on', red warning light indicators & audible alarm for low oil pressure, high water temperature & engine alternator not charging.

CONTROL PANEL OVERVIEW

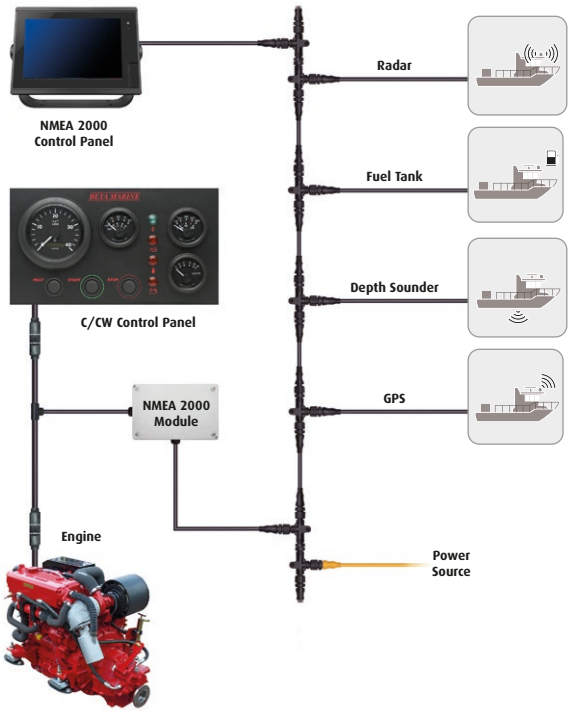

Optional 'C/CW' - NEMA 2000 Module

Beta Marine & Actisense have developed an interconnection module to facilitate an interface that will connect a Beta Marine C or CW engine control panel with an NMEA 2000 network. This module simply "T" connects between an engine and engine control panel & converts information to a NMEA 2000 network friendly format. It enables you to digitally monitor engine RPM, engine temperature, oil pressure or voltmeter reading from your NMEA 2000 control panel. The interconnection module uses a standard Micro-C connection to allow data to be relayed and viewed all across your NMEA 2000 on-board network. On vessels with twin engine installations it is possible to re-configure your NMEA 2000 network software to facilitate dual or independent viewing on network devices.

This control panel has its own operators manual, please refer to OM 221-21007.

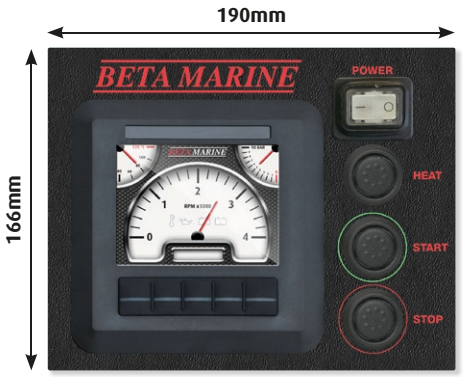

Optional Digital Control Panel 'D'

Our most advanced engine control/monitor module is water resistant to IP67. As well as controlling the engine 'HEAT', 'START' & 'STOP' functions it allows you to monitor engine RPM, engine temperature, oil pressure and provides a voltmeter for single or twin alternators. The panel uses standard Micro-C connection which allows data to be relayed and viewed across the vessels on-board network. It is compatible with NMEA 2000 & IEC 61 162-3. On vessels with twin engine installations each engine control panel needs to be programmed as Port & Starboard to facilitate dual or independent viewing on other network devices.

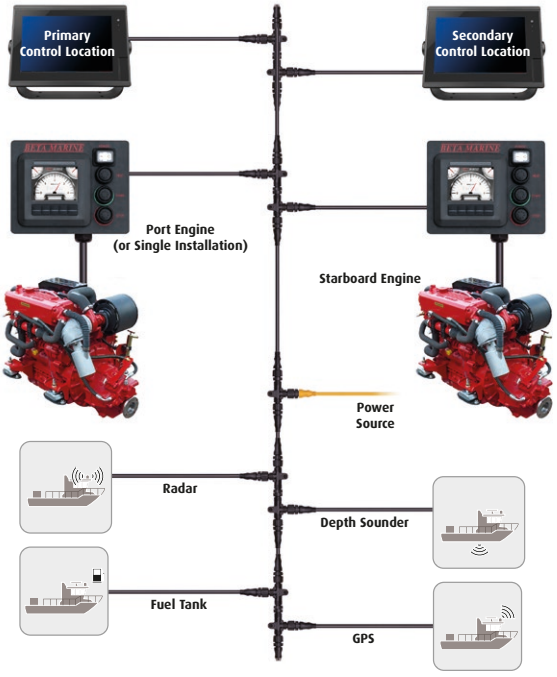

This control panel has its own operators manual, please refer to OM 221-10643.

CONTROL PANEL INSTALLATION

CONTROL PANELS

Control modules are supplied as standard with a 3m multi-core cable for connection to the engine wiring loom.

Extension looms of 5m or more are available should your installation require it or you wish to relocate your existing panel/s, all looms include a start relay to overcome the voltage drop.

For standard wiring diagrams see diagram index, page 88.

⚠ IMPORTANT!

The control panel must be installed in a location where the helmsman can either see or hear the alarm system.

The location should also provide adequate protection from adverse temperature, moisture and vibration. If vulnerable a suitable protective cover should be installed.

Ensure there is adequate clearance behind the panel so connection block/s and wiring is not at risk of being crushed.

Control panels must be sealed to ensure no water moisture can get to the rear of the panel. Care should be taken to not over tightening fixings and cracking the panel fascia.

CONNECTING INTERCONNECTION CABLES

1. All electrical equipment must be protected from water. To prevent corrosion and assist in connecting the cable to the control panel to the engine we recommend that the plug boots are packed with petroleum jelly (Vaseline).
2. Carefully roll the 2 plastic protective boots back over themselves and then push the 2 plug sockets together, check all pins are fully engaged then use a cable tie to lock them together (A). Pack the protective plastic boots with petroleum jelly (Vaseline) then roll them back to cover the plug sockets and overlap one over the other. 2 cable ties should then be used to help prevent help prevent any ingression of water (B & C), please refer to the illustration below.
3. All cables must be adequately clipped and protected from abrasion.
4. Electrical systems shall be designed and installed so as to ensure proper operation of the craft under normal conditions of use and shall be such as to minimise risk of fire and electric shock.
5. Attention shall be paid to the provision of overload and short circuit protection of all circuits, except engine starting circuits supplied from batteries.

44

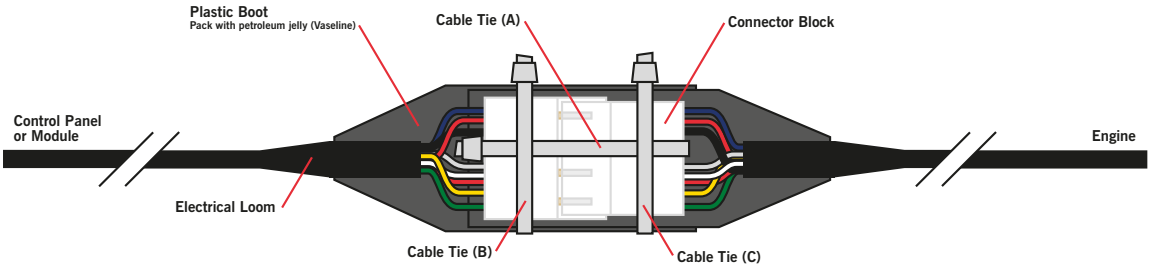

Section 2: Initial Engine Start Up

INITIAL ENGINE START UP

IMPORTANT!

CHECKS PRIOR TO INITIAL START UP

Re-Check:

1. Flexible mountings and engine room ventilation.
2. Exhaust installation.
3. The **heat exchanger cooling circuit**:
   - Open the sea-cock.
   - Check for any leakage.
4. The calorifier circuit (if installed)
5. Initial engine coolant levels.
6. Control panel installation and connection.
7. Fuel system is initially bleed.
8. DC battery is fully charged and the isolator is switched to the ON position.
9. Ensure the engine is free to turn without any obstruction.

WARNING!

DO NOT engage the starter motor continuously for more than 10 SECONDS to prevent the risk of overheating.

INITIAL ENGINE START UP POINTS

If the engine has not started after **3 attempts**, there is a possibility that air is still in the fuel system. Switch off the control panel and repeat "bleeding the fuel system". Hand prime the engine with the fuel lift pump lever or button for **30 seconds**, then re-attempt initial engine start up.

If engine does not start after **3 attempts** then allow 5 minutes for the starter to cool down before retrying.

If the engine does not start after **3 attempts**, **do not over crank** a heat exchanger engine with the seawater inlet sea-cock turned '**ON**'.

Close/shut off the seawater inlet sea-cock to stop seawater being pumped into the exhaust system to prevent the risk hydraulic lock occurring.

When you re-attempt initial engine start up and the **engine fires and runs** you must immediately **re-open** the sea-cock.

NORMAL STARTING AND STOPPING

KEY SWITCH CONTROL PANEL - FUNCTIONALITY

Control Panel Options: A, ABV, B & C.

1. Turn on the battery isolating switch/es and move the engine start key to the '**RUN**' position, the panel lights should function as follows.

Red panel light for 'low oil pressure' should illuminate.

Red panel light for 'high engine temperature' should not illuminate. **NB:** This light will only ever illuminate if the engine crosses over the high temperature safety threshold.

Red panel light for 'no starter battery charge' should illuminate.

Red panel light for 'no domestic battery charge' should illuminate - Applies for control panels AB & C only. **NB:** This red panel light will only illuminate if a second alternator is fitted to the engine and connected to a battery bank.

Green panel light for 'power on' should illuminate and the audible buzzer should sound.

2. In cold temperatures turn key to '**HEAT**' and hold in position for no more than 6 seconds.

3. Turn key to '**START**' and hold in position until the engine fires (please refer to guidelines for initial engine start up for maximum time starter can be operated). Release key when the engine has started and allow to return to the '**RUN**' position.

All red panel warning lights should stop illuminating and the audible buzzer should cease.

The low oil pressure light may take a few seconds to stop illuminating and the no starter battery charge & no domestic battery bank charge light/s (if appropriate) may remain on until the engine rpm is increased to approximately 1,000rpm if the engine was started on tick-over.

Green light for 'power on' should remain illuminated.

4. To stop the engine press the '**STOP**' push button, hold in until engine stops then turn the key to the '**OFF**' position.

WARNING! DO NOT leave the key in 'HEAT' position for more than 6 seconds - this will damage the heater/glow plugs and eventually lead to poor starting.

NORMAL STARTING AND STOPPING

PUSH BUTTON CONTROL PANEL - FUNCTIONALITY

These panels control the engine with three water resistant push buttons instead of a keyswitch, and is less prone to damage and corrosion from sea water spray. Control Panel Options: ABVW, BW & CW.

Turn on the battery isolating switch/es.

1. Press and hold '**HEAT**' button for six seconds maximum.

Red panel light for 'low oil pressure' should illuminate.

Red panel light for 'high engine temperature' should not illuminate. **NB:** This light will only ever illuminate if the engine crosses over the high temperature safety threshold.

Red panel light for 'no starter battery charge' should illuminate.

Green panel light for 'power on' should illuminate and the audible buzzer should sound.

2. Push the '**START**' button and hold in position until the engine fires (please refer to guidelines for initial engine start up for maximum time starter can be operated) Release the button when the engine has started.

All red panel warning lights should stop illuminating and the audible buzzer should cease.

The low oil pressure light may take a few seconds to stop illuminating and the no starter battery charge & no domestic battery bank charge lights (if appropriate) may remain on until engine rpm is increased to approximately 1,000rpm if the engine was started on tick-over.

Green light for 'power on' should remain illuminated.

3. To stop the engine press the '**STOP**' push button, hold in until engine stops. This button also switches the power off to the gauges, engine and power on light.

⚠ WARNING! DO NOT press the 'HEAT' push button in position for more than 6 seconds - this will damage the heater/glow plugs and eventually lead to poor starting.

EMERGENCY STOPPING

Every propulsion engine is fitted with a back up stop lever. To activate and stop the engine manually, simply press the stop lever highlighted in image 45 down and hold in place until engine stops.

For control panels operated by a key switch, turn the key from the run to the off position. Then for all engines regardless of control panel type, isolate the starter battery.

⚠ WARNING!

DO NOT leave the key in the 'OFF' position when engine is running. This will not allow the alternator to charge and will damage the alternator.

DO NOT depress the stop lever for more than ten seconds as this will lead to overheating and failure of the solenoid.

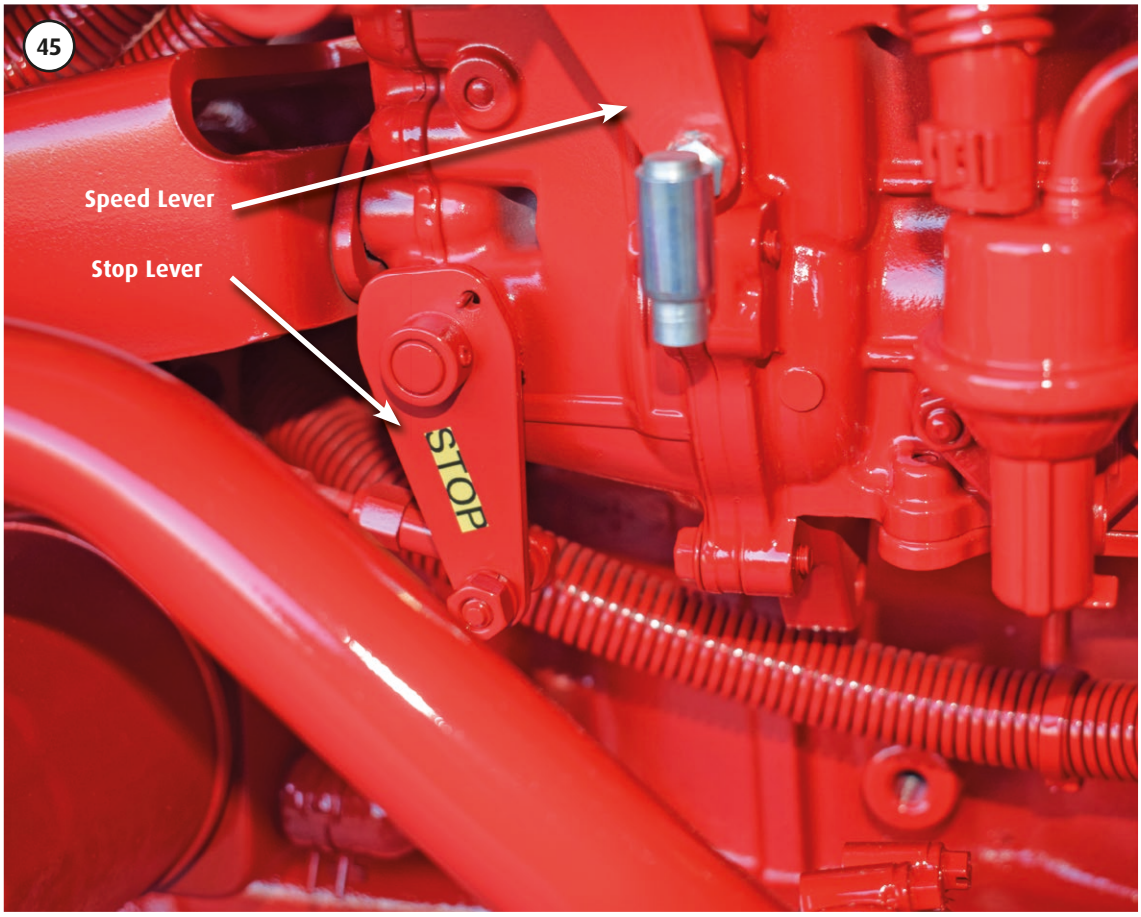

The emergency engine stop lever is located:

All variants (excluding Beta 75, 90, 90T, 105T & 115T)
Forward end, mid level, starboard side when viewed from the gearbox end.

Beta 75, 90, 90T, 105T & 115T
Mid engine, mid level, starboard side when viewed from the gearbox end.

When leaving the vessel for an extended period: turn off the sea-cock if heat exchanger cooled and isolate the starter battery.

Section 3: Maintenance Guidelines

MAINTENANCE SCHEDULE

DAILY OR EVERY 8 HOURS RUNNING

- Check engine oil level.
- Check gearbox oil level.
- Check coolant level.
- Check battery fluid.
- Check belt tension and alternator bolts.
- Ensure raw water inlet strainer is clear.
- Check stern gland lubrication if used.
- Drain off any water in fuel/water separator.

AFTER THE FIRST 25 HOURS RUNNING

- Change gearbox lubricant (See separate gearbox manual).
- Check that all external nuts, bolts and fastenings are tight. **Do NOT over tighten.** Special attention should be paid to the flexible mount lock nuts, these should be checked for tightness, starting with lower nut first in each case. If the lower nuts are found to be very loose, then the alignment of the shaft to the gearbox half coupling should be re-checked. Poor alignment due to loose flexible mount nuts will cause excessive vibration and knocking.
- Check and adjust all drive belt tensions.
- Check ball joint nyloc nuts for tightness on both gearbox and speed control levers. Grease both fittings all over.

AFTER FIRST 50 HOURS

- Change engine lubricating oil.
- Change oil filter.
- Check for leaks on header tank tubestack. Tighten end cap bolts if required.
- Drain off any water in fuel/water separator.

AFTER 150 HOURS

- If shallow sump (option) is fitted, change engine lubricating oil and filter.

EVERY YEAR OR 250 HOURS IF SOONER

- Change engine lubricating oil (standard sump).
- Change lubricating oil filter.
- Change fuel filter.
- Check air cleaner element.
- Check sea water pump impeller and change if worn.
- Check wasting anode condition, replace when necessary.
- Remove heat exchanger tube stack, by undoing the bolts each end of the tube stack. Remove end cover, pull out tube stack and clean. Replace rubber 'O' rings and re-assemble. Top up with anti-freeze. Immediately engine is started check for leaks.
- Spray the key switch with petroleum jelly/WD40 or equivalent to lubricate the barrel.
- Check that all external nuts, bolts and fastenings are tight.
- Check ball joint nyloc nuts for tightness on both gearbox and speed control levers.

EVERY 750 HOURS (IN ADDITION TO 250 HOURS MAINTENANCE)

- Change air cleaner element.
- Check valve clearance.

EVERY 1500 HOURS

- Check injection nozzle pressure.

Maintenance Schedule

	Daily or after every 8hrs running	After first 25hrs	After first 50hrs	Every 150hrs*	Annually or 250hrs if sooner	Every 750hrs	Every 1500hrs
Check engine oil level	●						
Change engine oil			●	●	●		
Change engine oil filter			●	●	●		
Check gearbox oil level	●						
Change gearbox oil		●	Thereafter refer to the supplied gearbox operators manual				
Check engine coolant/antifreeze level	●						
Check engine coolant/antifreeze condition**					●		
Check battery fluid	●						
Check belt tension/s and alternator bolts	●						
Check raw water inlet strainer is clear	●						
Check stern gland lubrication - if applicable	●						
Drain off any water in fuel/water separator	●						
Change diesel fuel filter					●		
Check all external nuts, bolts and fastenings. Check condition of all coolant, fuel, oil pipes and clamps. Check ball joint nyloc nuts on both gearbox and speed control levers		●	●		●		
Lubricate keyswitch on control panel with petroleum jelly/WD40 or equivalent - if applicable			●		●		
Check sacrificial anode, **replace if necessary** - increase inspection frequency if heavy erosion experienced			●		●		
Remove heat exchanger tube stack, clean and **replace** rubber o-rings					●		
Check sea water pump impeller and **change if worn**					●		
Check air cleaner element, clean and **change if required** - increase inspection frequency if heavy soiling is experienced					●		
Change air cleaner element						●	
Check valve clearance						●	
Check injection nozzle pressure							●

* **Shallow sump equipped engines only**
** **Replace engine coolant/antifreeze every other year or 500hrs if sooner**

GENERAL MAINTENANCE

1. Water entering the key switch will eventually cause corrosion and could result in the starter motor being permanently energised and burning out. Spray key switch every month with WD40 or equivalent; or apply 'Vaseline'.
2. Check batteries for acid level and top up if required. For low maintenance and 'gel' batteries, please refer to the manufacturers instructions.
3. Loose spade terminal connections are the most common cause for electrical faults - check on a regular basis, please refer to 'Electrical Fault Finding' within trouble shooting.

'SUPER SILENT' ACOUSTIC ENCLOSURE

'Super Silent' acoustic enclosures should be kept free (internally and externally) of any contaminate spillage such as diesel fuel, lube oil or engine coolant.

With the exception of periodically checking that all of the enclosure assembly nuts, bolts, screws for tightness and all ancillary connections are secure there is no specific maintenance regime.

⚠ IMPORTANT!

Keep the enclosure air in vents free of debris, the air out duct must be vented out of the engine room.

46

CHECKING THE ENGINE OIL LEVEL

When checking the engine oil level, do so before starting, or more than five minutes after stopping.

1. To check the oil level, draw out the dipstick, wipe it clean, re-insert it, and draw it out again, please refer to image 47. Check to see that the oil level lies between the two notches.
2. If the level is too low, add new oil to the engine to the specified level, please refer to image 48.

When using an oil of a different make or viscosity from the previous one, drain out the old oil. **Never mix two different types of oil.**

Engine oil should be changed after first 50 hours running time and then every year or every 250 hours if sooner.

IMPORTANT!

Over-filling your engine with oil can be as detrimental as under-filling.

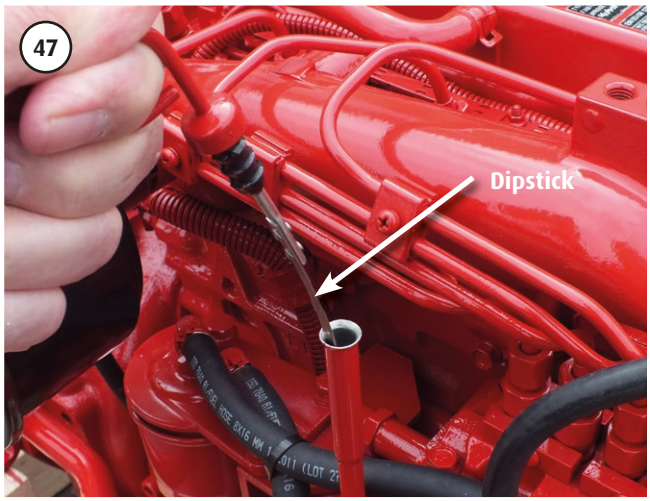

CHANGING THE ENGINE OIL

For quantities of engine oil required please refer to pages 7 to 17.

1. Run the engine for 10 minutes to warm up the oil, then stop it and open the oil filler cap.
2. Your engine is provided with a sump drain pump. Unscrew the end cap on the end of the pump spout, turn the tap to 'on'. Use the hand pump to pump out the oil into a appropriate container. Once drained turn the tap to off position and replace end cap. Please refer to image 49.
3. The oil filter is a spin on type. Remove by turning anti-clockwise when viewed face on or from below. Please refer to image 50.

   NB: It is best practice to have either a drip tray or cloth wrapped round the filter to catch any oil that maybe left in the system and assist with keeping the bilge clean. Spread a thin film of lube oil around the new filter`s rubber gasket to ensure a good seal and screw in **hand tight**.
4. Fill the engine with new oil and replace the oil filler cap. Please refer to page 39.
5. Run the engine and check for oil leaks.

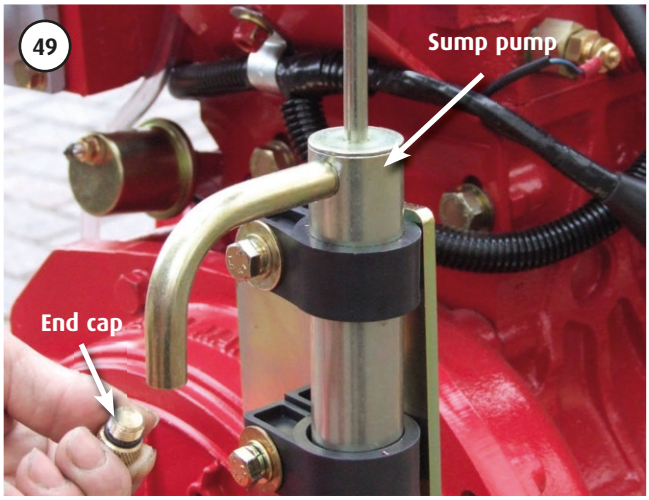

Sump pump location:

Beta 14, 16, 20 & 25
Mid engine, starboard side when viewed from the gearbox end.

Beta 30, 35, 38 & 45T
Forward end, starboard side when viewed from the gearbox end.

Beta 43, 50, 60, 85T, 90T, 105T & 115T
Aft engine, starboard side when viewed from the gearbox end.

Beta 70T
Mid engine, starboard side when viewed from the gearbox end

Beta 75 & 90
Heat exchanger mounted, port side when viewed from the gearbox end.

Oil filter location:

Beta 14, 16, 20, 25, 30, 35, 38 & 45T
Forward end, port side when viewed from the gearbox end

Beta 43, 50, 60, 70T & 85T
Forward end, starboard side when viewed from the gearbox end.

Beta 75, 90, 90T, 105T & 115T
Aft engine, starboard side when viewed from the gearbox end.

⚠ IMPORTANT! When changing the oil filter, do not allow any contaminant to enter the relief valve.

CHECKING THE CRANKCASE BREATHER - OIL SEPARATOR

Beta 105T & 115T turbocharged engines are fitted with a crankcase breather - oil separator which should be inspected annually and replaced when heavily soiled.

This requires removal of the 4 cap screws and lifting it off the top of the breather main body. Reverse this procedure for re-assembly. Please refer to image 51 & 52.

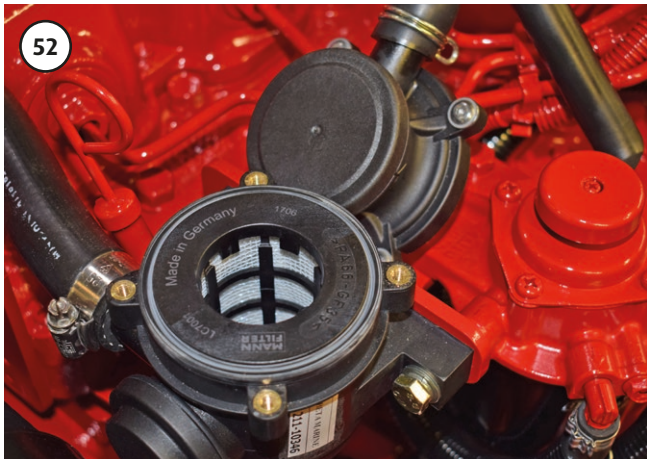

CHECKING THE GEARBOX OIL LEVEL

1. The gearbox is fitted with a dipstick and oil filler plug, please refer to image 53.
2. Each engine is supplied with a gearbox 'operators manual' which specifies the type of lubricating oil to be used, the capacity and frequency of changing of the oil.

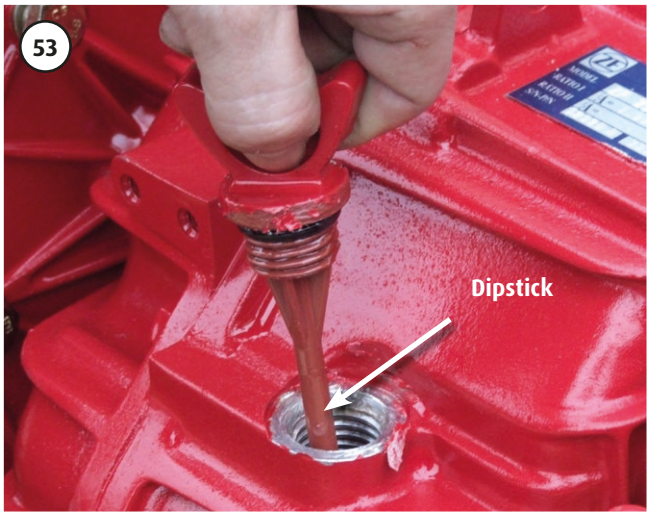

IMPORTANT! Over-filling your gearbox with oil can be as detrimental as under-filling.

CHANGING THE GEARBOX OIL

1. The oil can be changed via the drain plug at the bottom of the box or sucked out with a hand pump via the filler plug.
2. Run the gearbox for 10 minutes to warm up the oil.
3. Switch off the engine, remove the dipstick and begin to drain oil from the gearbox and cooling system. The drain plug is located on aft starboard side of the gearbox on most models.
4. Allow to drain, before refilling the gearbox with new oil as recommended.
5. Run the engine to allow oil to circulate, then stop and allow the oil to settle. Re-check the oil level and top up if necessary.
6. Ensure dipstick and cap are firmly secured and check for oil leaks, especially around the output shaft oil seal and gasket sealing surfaces.

NB: ATF is Automatic Transmission Fluid.

Gearbox operator manuals can be downloaded as PDF's. Please visit: **www.betamarine.co.uk** or contact Beta Marine.

Gearbox	Lubricant	Capacity (Approx.)
TMC40	ATF	0.2 L
TMC60/A	ATF	0.6 L
TMC260	ATF	1.2 L
TM345/A	Oil	1.6 L
TM93/A	Oil	2.4 L
TM170/A	Oil	2.8 L

Gearbox	Lubricant	Capacity (Approx.)
ZF 25/A	ATF	1.8 L
ZF 45/A	ATF	2.5 L
ZF 15 MIV	ATF	1.0 L
ZF 63 IV	ATF	4.0 L

Gearbox	Lubricant	Capacity (Approx.)
PRM 60	ATF	0.2 L
PRM 90	ATF	0.3 L
PRM 125	ATF	0.4 L
PRM 150	Oil	1.4 L
PRM 280	Oil	1.5 L
PRM 500	Oil	2.5 L
PRM 750	Oil	2.5 to 3.5 L
PRM 1000	Oil	3.0 to 4.0 L

FUEL FILTER REPLACEMENT

1. The fuel filter is a spin on type. Remove by turning anti-clockwise when viewed face on or from below.
2. Replace the fuel filter cartridge every 750 hours or every 2 years. Please refer to image 54.
3. Spread a thin film of diesel fuel around the new filter`s rubber gasket to ensure a good seal and screw in **hand tight**.

NB: It is best practice to have either a drip tray or cloth wrapped round the filter to catch any fuel that maybe left in the system and assist with keeping the bilge clean.

4. Bleed fuel system as detailed in 'Installation Guidelines' page 40 & 41.
5. Check for leaks.

⚠ IMPORTANT!

Keep flexible anti-vibration mounts free from diesel fuel, engine coolant & lubrication oil to prevent deterioration.

Fuel filter location:

All variants (excluding Beta 75, 90, 90T, 105T & 115T)
Forward end, starboard side when viewed from the gearbox end.

Beta 75, 90, 90T, 105T & 115T
Aft engine, starboard side when viewed from the gearbox end.

SEA WATER PUMP AND COOLING SYSTEM

IMPORTANT!

Before working on the sea water system ensure that the sea cock is in the off position.

1. It is very important that the correct sea water flow is maintained to cool the closed circuit system of the engine. The key component in this system is the sea water pump impeller. This should be checked every year by removing the circular plate. Please refer to image 55.
2. Withdraw the rubber impeller from its drive shaft as shown. Please refer to image 56. Pliers may be required.
3. Check impeller for cracks in the rubber, excessive wear or lost vanes. Replace with a new impeller as necessary. A drop of washing up liquid on the impeller will help to push it back into position.
4. If refitting the exisiting impeller make sure it's blades are facing in the same direction as they were before the impeller was removed.

NB: If any pieces of rubber impeller are missing then they must be located as they are most likely to be trapped in the entrance to, or within the heat exchanger cooling stack.

5. Run the engine up to temperature and check for leaks.

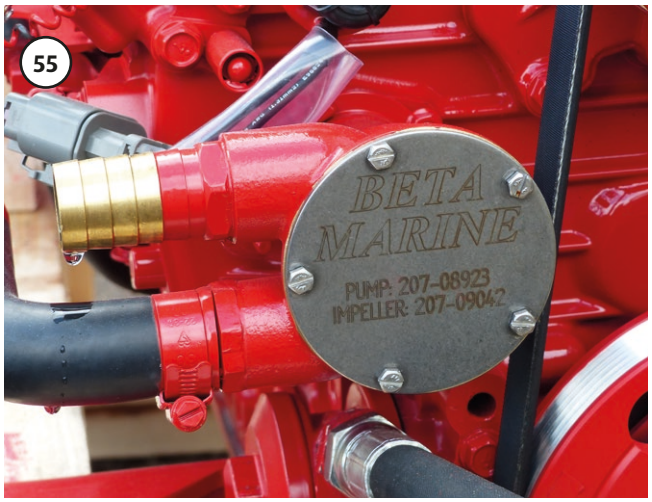

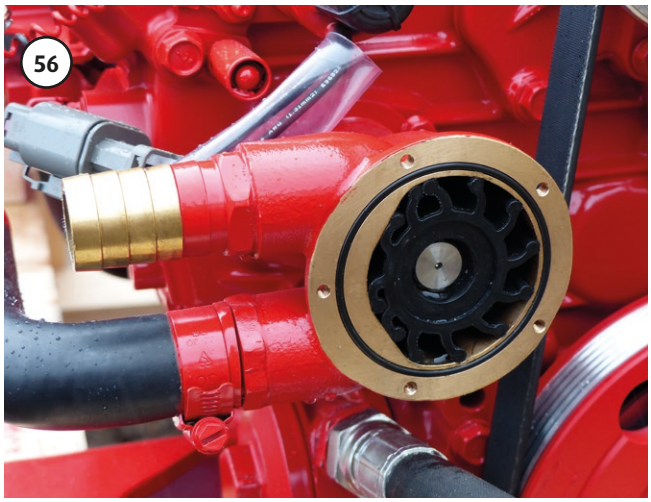

Sea water pump location:

Beta 14, 16, 20 & 25
Forward end, starboard side when viewed from the gearbox end.

Beta 30, 35, 38 & 45T
Forward end, centre of the engine when viewed from the gearbox end.

Beta 43, 50 & 60
Forward end, port side, when viewed from the gearbox end.

Beta 70T & 85T
Mid engine port side when viewed from the gearbox end.

Beta 75, 90, 90T, 105T & 115T
Forward end, starboard side, when viewed from the gearbox end.

HEAT EXCHANGER TUBE STACK AND 'WASTING ZINC ANODE'

1. The wasting zinc anode should be checked regularly at least every six months and replaced every year or sooner, as necessary. The anode is attached to the bolt inserted in the end cap of the heat exchanger. Please refer to image 57. On most engines this is on the aft end of the heat exchanger.
2. Unscrew the bolt and replace the complete unit with a new one.
3. It is possible for fine sea weed and other debris to get past the inlet filter and into the tube stack. This should be removed and cleaned. Please refer to image 58.
4. Drain off coolant into a bucket.
5. Unscrew the 6 end cap retaining bolts using a 5 mm Hex key (3 each end of the heat exchanger). Remove the 'O' rings and slide out tube stack*. Carefully clean tube stack and end caps.
6. Re-assemble using new 'O' rings. The tube stack can be fitted either way around but must be aligned correctly with the horizontal line and rubber seal between the alignment marks at the exhaust end of the heat exchanger. (This ensures correct coolant flow in the heat exchanger) Do not over tighten end cap bolts. Please refer to image 58.
7. Re-fill engine with coolant (water/anti-freeze solution) and run engine up to temperature to check for leaks. Please refer 'Filling the Engine Coolant System' on page 46.

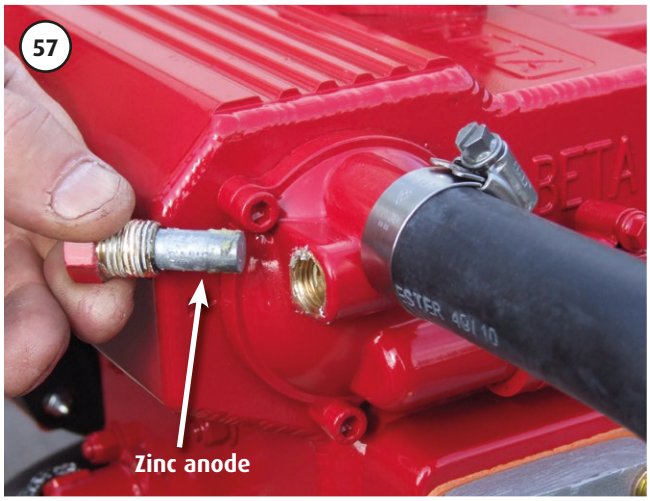

***NB:** On **Beta 45T, 70T, 85T, 90T, 105T & 115T** which are turbocharged, the anode is attached to the bolt inserted in the front gear end cap of the heat exchanger additionally the tube stack must be removed and replaced from the front gear end. Please refer to image 59 & 60.

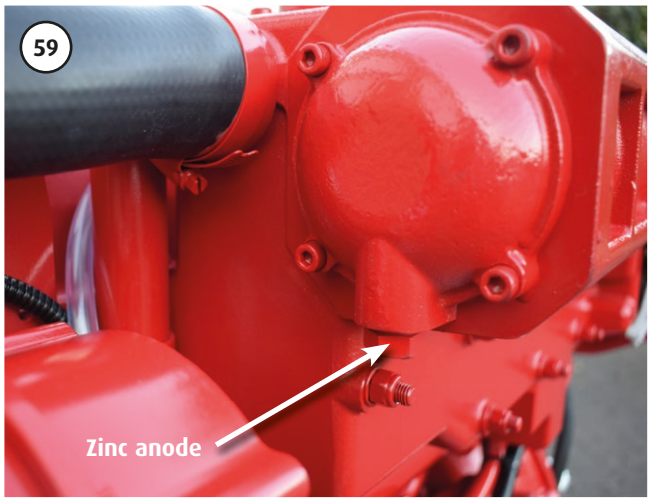

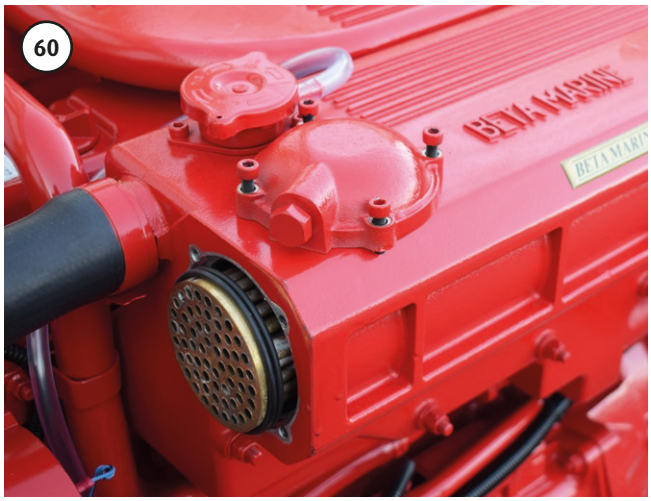

ALTERNATOR BELT TENSION

⚠ WARNING!

Belt tension must only be checked with the engine switched off.

BATTERY CHARGING ALTERNATOR

These engines are fitted as standard with with either a Polyvee (Beta 10 to Beta 45T) or an "A" profile (Beta 43 to 115T) belt that drives both the battery charging alternator and the fresh water/engine coolant circulating pump.

1. The belt tension is adjusted by swinging the DC alternator outboard as it pivots on its support bolts. Please refer to image 61 or 62.
2. With the engine stopped, loosen the support bolts and the link adjusting bolt.
3. Push alternator outboard by hand to tension the belt, then tighten link bolt.
4. Check that the depression of the belt (at position shown) is approximately $^1/_2$" or 12 mm when pushed down firmly by thumb. Tighten support bolts. Please refer to image 63.

⚠ IMPORTANT!

Tension drive belts by hand only, do not over tension.

5. Belt tension should be regularly checked especially during the first 20 hours of running in a new belt, as stretching occurs.

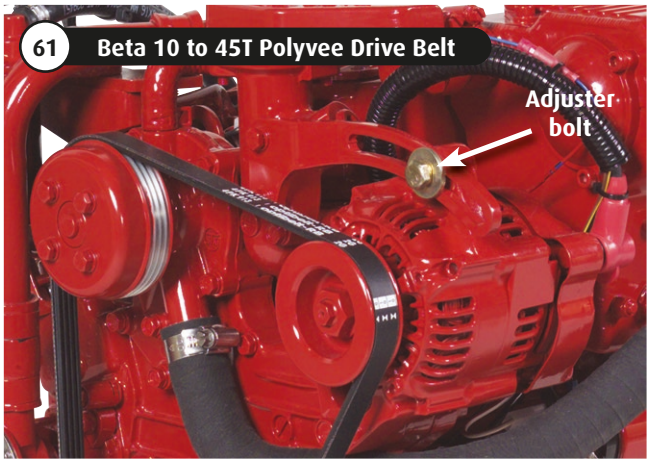

61 Beta 10 to 45T Polyvee Drive Belt

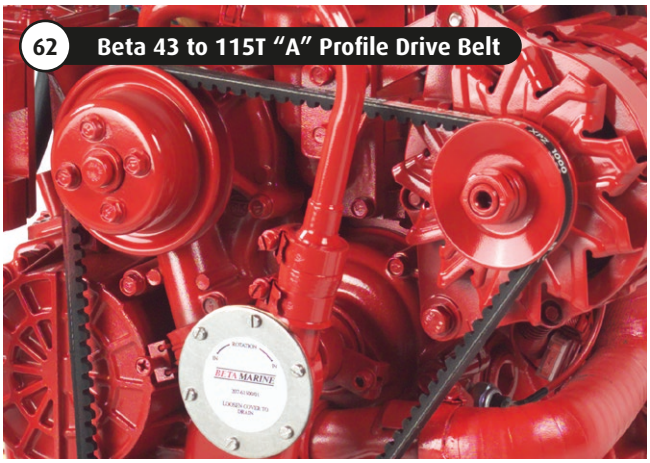
62 Beta 43 to 115T "A" Profile Drive Belt

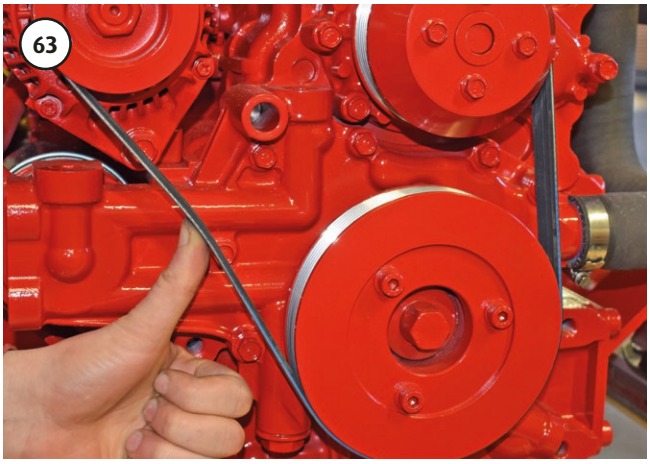
63

SECONDARY DOMESTIC BATTERY CHARGING ALTERNATOR

The same method applies as outlined above when an engine is fitted with a secondary domestic battery bank alternator and/or travel power.

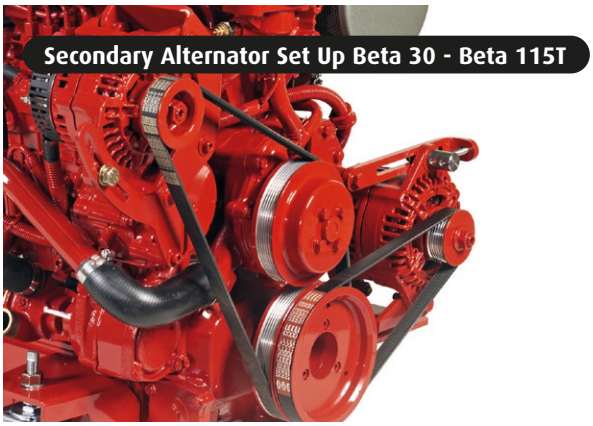
Secondary Alternator Set Up Beta 30 - Beta 115T

AIR FILTER

All variants (excluding Beta 70T & 85T)

Are fitted with a `replaceable air filter element` which should be inspected annually and replaced every 2 years or sooner if heavily clogged. If this occurs increase inspection frequency.

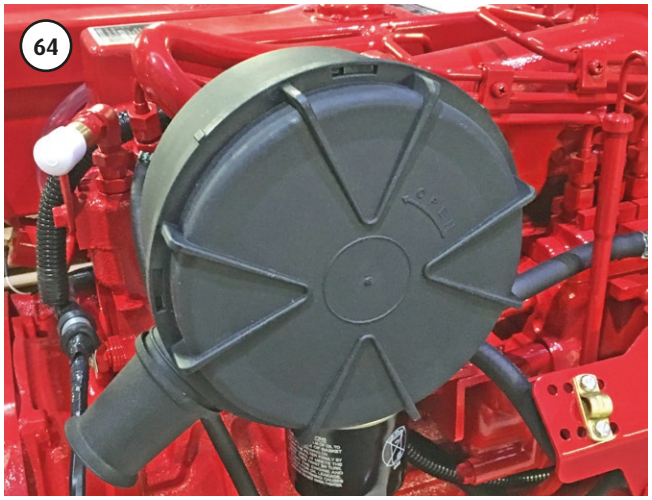

Beta 70T & 85T

These engines are fitted with an `air filter cartridge assembly` which should be inspected annually and replaced every 2 years or sooner if heavily clogged. If this occurs increase inspection frequency.

WINTERISING AND LAYING UP

a) The engine lubricating oil and lubricating oil filter should be changed at the end of the season rather than in the spring. Please refer to 'Section 2'.

b) The closed circuit cooling system must contain an anti-freeze coolant solution. The coolant solution is a mixture of fresh water and anti-freeze (Mono Ethylene Glycol based conforming to BS6580:1992) with the anti-freeze being a 50% solution (this also applies to warm and tropical climates). The warranty is invalid if the correct percentage/ratio is not used.

c) For cold climates where the air or water temperatures can fall below 3°C, the sea water circuit must be protected in addition to the fresh water system. This is best achieved as follows:

- Close the inlet seacock to the engine (engine stopped).
- Disconnect the sea water inlet pipe and dip it into a small bucket containing 50:50 anti-freeze solution.
- Start the engine and run for 5 to 10 seconds until the anti-freeze is used up and can be seen coming out of the exhaust outlet.
- Shut engine off and reconnect the inlet pipe to the seacock. The sea water or raw water circuit is now protected by anti-freeze.

d) Ensure instrument panel is well protected and give the key switch a spray of WD40/Petroleum Jelly or equivalent.

e) With the engine stopped, disconnect the battery (always disconnect the negative cable first and re-connect the negative cable last) top up and trickle charge as appropriate.

f) Fuel tanks should be kept full during the lay up period to eliminate water condensation in the tank. Water entering the fuel injection system can cause considerable damage.

LAYING UP ASHORE

a) Change the engine oil before the vessel is taken out of the water as warm engine oil is much easier to remove than cold.

b) Cooling system - As above in 'Winterising and Laying Up' paragraphs (b) to (f) should be followed.

c) If the engine is to be laid up for more than 6 months then remove the sea water pump impeller - heat exchanger cooled only.

d) If the engine will not be used or run for periods longer than 6 months we recommend that the engine is 'inhibited' - this involves running the engine for about 5 minutes to:

- Replace all the diesel fuel in the fuel system and injection pump by running the engine with 'calibration fluid' (fuel pump test oil ISO 4113).
- Allow 'Ensis' to circulate around the lubricating oil system by draining out the standard lubricating oil and replacing it with a rust preventative oil such as 'Ensis' or similar.

Section 4: Trouble Shooting

Beta diesels are very reliable if installed and serviced correctly, but problems can occur and the following list gives the most common ones and their solution.

Problem: Engine does not start but starter motor turns over OK

Possible Cause	Solution
No fuel:	Turn fuel cock on and fill tank.
Air in fuel system:	Vent air (please refer to 'Initial Start-up' on page 46).
Water in fuel:	Change fuel filter, check fuel/water separator and bleed system.
Blocked fuel pipe:	Clean out and bleed system.
Fuel filter clogged:	Change filter and bleed system.
Fuel lift pump blocked:	Remove and replace.
Blocked injector:	Remove and clean.
Fuel return not fed back to the tank:	Re-route fuel return pipe.
Heater plugs not working:	Check wiring to the plugs, and replace plugs if they are burnt out.
Stop solenoid stuck in off position:	Check solenoid is free to return to run position.

Problem: Starter motor will not turn or turns over very slowly

Possible Cause	Solution
Battery discharged:	Charge battery or replace. Check alternator belt tension.
Starter motor flooded with sea water:	Remove and clean, or replace.
Wiring disconnected or loose:	Check circuit for loose connections.
Water in cylinders:	Check engine oil for signs of water (creamy-coloured oil). If found do not attempt to start the engine, contact your dealer or service agent.
Engine harness fuse blown:	Replace fuse located by starter motor (or above flywheel housing) and check for wiring faults.

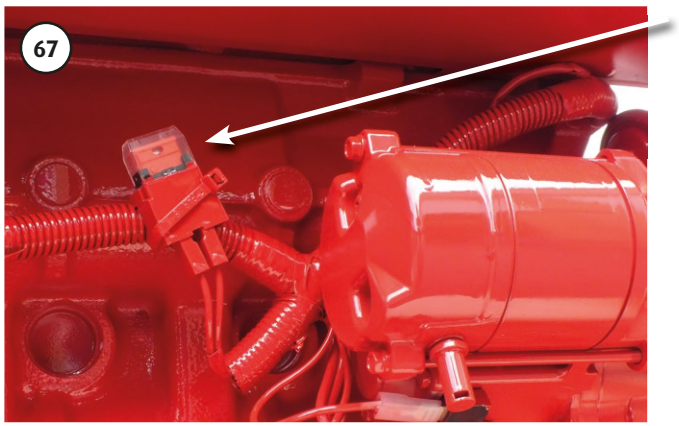

Fuse

NB: For convenience, some engines are supplied with a spare fuse and holder attached to the main engine fuse holder.

Problem: Low power output

Possible Cause	Solution
Propeller is too big:	Change or depitch.
Check gearbox reduction ratio relative to propeller size:	Change the most appropriate item.
Blocked fuel filter:	Replace.
Blocked air filter:	Replace.
Air in fuel system:	Check system and bleed.
Governor spring incorrectly mounted:	Dealer to adjust.
Single lever control not operating correctly:	Disconnect speed control cable and move the lever by hand. Adjust cable.
The electrical load is too large on start up:	Disconnect or reduce the load.

Problem: Erratic running/hunting

Possible Cause	Solution
Air in fuel supply:	Check supply system for leaks and fix.
Fuel lift pump faulty:	Replace.
Clogged fuel filter:	Replace.
Fuel return not fed back to the fuel tank, or blocked pipe:	Re-route pipe or clean.
Air filter blocked:	Replace.
Worn or blocked injector:	Service injectors.
Engine rpm in gear is too low, this must be 850 min:	Increase engine tick over speed.
Faulty stop solenoid:	Disconnect wiring to solenoid. If running improves check for a wiring fault.
Broken fuel injection pump spring:	Replace, this is usually caused by water in the engine oil/fuel.
Fuel suction head is too great:	Fit electric fuel lift pump.

Problem: Hunting at idle

Possible Cause	Solution
Idle adjustment screw may need adjusting:	Always contact Beta Marine for advice with idle adjustment.

Problem: Hunting at higher speeds

Possible Cause	Solution
Fuel supply problem:	Change fuel filter and check fuel supply.

Problem: White or blue exhaust gas

Possible Cause	Solution
Engine oil level too high:	Reduce the level.
Blocked injector:	Service injectors.
Piston ring and bore worn or con rod bent due to water ingression, giving a low compression:	Get the compression checked by your dealer or service agent. They will advise action to be taken.
Check that the breather pipe is clear and not obstructed:	Remove and clean out.

Problem: Black exhaust gas

Possible Cause	Solution
Blocked air filter element:	Inspect and replace.
Over pitched propeller - engine will not reach its full rpm:	Get the propeller re-pitched if necessary.
Accumulated debris on hull:	Inspect and clean if required.

Problem: Low oil pressure warning light on when underway

Possible Cause	Solution
Oil frothing due to high installation angle or high oil level:	Always contact Beta Marine for advice.

Problem: Low oil pressure warning light when engine speed reduced to tick over

Possible Cause	Solution
Faulty switch sender:	Replace.
Engine running too hot:	Check cooling water flow (please refer to 'Cooling').
Oil relief valve stuck partially open with dirt:	Remove and clean.
Blocked oil filter:	Change.
Wiring fault:	Check circuit.
Insufficient oil:	Top up and check for leaks.

Problem: High oil consumption

Possible Cause	Solution
Oil leaks:	Check for leaks.
Piston rings worn:	Overhaul required.
Valve stem and guide worn:	Overhaul required.
Piston rings gap facing the same direction:	Shift ring gap position. Dealer or service agent to check.

Problem: Water in lubricating oil - general

Possible Cause	Solution
Core plug pushed out due to frozen block:	Dealer or service agent to check and replace.
Water pump seal damaged:	Dealer or service agent to check and replace.

Problem: Water in lubricating oil - heat exchanger cooled

Possible Cause	Solution
Oil goes "milky" due to seawater entering exhaust manifold:	Check installation - has an anti-syphon valve been fitted? Change engine oil and run engine for 10 minutes each time to eliminate any water. Get fuel injection pump and compression checked by dealer or service agent.

Problem: Engine overheats - general

Possible Cause	Solution
Low raw water flow:	See below.
Check coolant level:	Top up.
Pressure cap loose:	Tighten correctly or replace.
Switch sender faulty:	Replace.
Insufficient restrictions in pipe to calorifier:	Clamp off pipe to confirm.
High exhaust back pressure:	Must not exceed the information given in 'exhaust back pressure' in the installation section.
Keel cooler insufficient size:	Contact boat builder.

Problem: Engine overheats - heat exchanger cooled

The most common cause of overheating is insufficient seawater flow due to a blocked intake. If this happens first clear the debris, causing the blockage. If the problem is not cured then check the system for sea water flow which should be 13 - 14 litres/minute minimum at 1,500 rpm as follows:

(a) With the vessel moored run the engine. Hold an appropriate container under the exhaust outlet for 10 seconds and measure the amount of water collected*. Multiply this value by 6 to give the flow in litres/minute. Repeat twice and take an average. If the flow rate is noticeably less than the 13 - 14 litres/minute minimum, then:

(b) Check impeller in sea water pump - if worn replace.

(c) If impeller has a vane missing then this will be lodged either in the pipe to the heat exchanger or in the end of the exchanger. This must be located and removed.

(d) Check flow again as in (a).

***NB:** This operation must only be done in safe conditions, in port with assistance. Always use appropriate personal protective equipment, risk assess handling hot water and exposure to exhaust gas emissions.

Problem: Vibrations

Possible Cause	Solution
Poor alignment to shaft:	The alignment must be accurate even if a flexible coupling is used (please refer to 'Alignment' on page 31).
Flexible mounts not adjusted correctly to take even weight:	Check relative compression of each mount.
Flexible mount rubber perished:	Replace. (Diesel or oil will eventually perish rubbers).
Loose securing nut on flexible mount:	Check alignment and then tighten the nuts.
Insufficient clearance between the propeller tip and the bottom of the boat:	There must be at least 10% of the propeller diameter as tip clearance between the propeller and the bottom of the boat. Reduce propeller diameter/increase pitch.
Loose zinc anode on the shaft:	Tighten or replace.
Worn cutless bearing or shaft:	Replace.
Weak engine support/bearers:	Check for cracked or broken feet.

Problem: Knocking noise

Possible Cause	Solution
Propshaft touching gearbox output coupling through split boss or Type 16 coupling:	Adjust, giving correct clearance give 5mm - 10mm between gearbox and propeller shaft.
Flexible mount stud touching engine bed:	Adjust stud to clear.
Drive plate broken:	Replace/repair.
Engine touching engine bed:	Re-align engine/modify bed.
Injectors blocked through excess carbon caused by water in the fuel:	Remove and check injector nozzles, replace if required.

Problem: Transmission noise

Possible Cause	Solution
Check gearbox oil level:	Top up.
"Singing" propeller:	Check with propeller supplier about 'harmonics'.
Drive plate rattle at tickover:	Check engine rpm (must be 850rpm min. in gear).
Worn drive plate:	Change.
Propeller shaft hitting the Gearbox half coupling:	Move shaft back to give 5mm - 10mm clearance (Type 12/16 couplings only).
Propeller torsionals causing gears to rattle at low rpm:	Fit a torsional flexible coupling such as Centaflex type 16 or equivalent.

Problem: Battery quickly discharges

Possible Cause	Solution
High load and insufficient running:	Reduce load or increase charging time. Large domestic battery banks subject to high electrical loads will take a considerable time to recharge from a single alternator.
Low electrolyte level:	Top up.
Fan belt slipping - black dust in engine compartment, engine compartment temperature too high:	Adjust tension/replace belt with a high temperature type and/or improve engine compartment ventilation.
Alternator defective:	Check with dealer or service agent.
Battery defective:	Replace.
Poor wiring connection:	Check wiring system.

Problem: Morse control cable will not fit

Possible Cause	Solution
Incorrect fitting:	Cables are being fitted the wrong way around, switch over and fit the opposite way.

Problem: Panel rev counter not working (when fitted)

Possible Cause	Solution
No W connection to alternator:	Check output from 'W' connection. Should be about 9V AC.
Wiring fault:	Check circuit.

ELECTRICAL TROUBLESHOOTING - GENERAL OVERVIEW

The following pages are compiled to aid diagnosis of electrical faults, based on the Beta 10 - 115hp range of engines. If your engine was built before July 2005, contact Beta Marine for the relevant electrical trouble shooting guide.

NB: our standard control panels are for earth return installations only (where battery negative cable is connected directly to engine ground). For insulated earth (where battery negative cable is isolated from engine ground) different harnesses, alternators, switches for oil pressure and engine temperature are fitted.

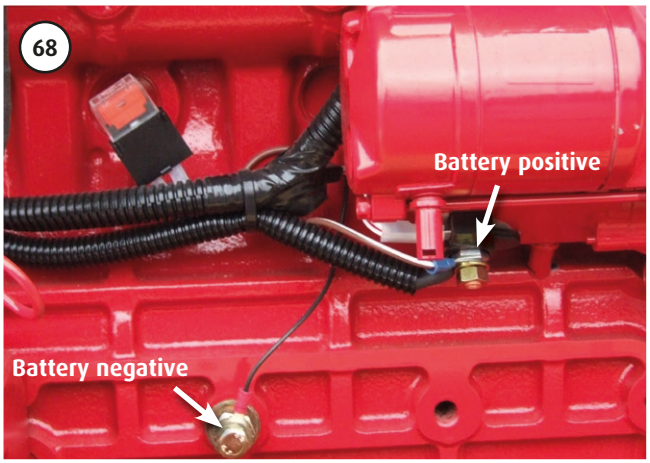

Standard heat exchanger cooled engines are supplied with a single starter battery alternator, a secondary domestic battery bank alternator is optional for the Beta 30 and above.

3.5kVA, 230v, 50Hz Travel Power alternators and inverter are optional for the Beta 35 and above. For the Beta 43 and above a 5kVA variant is additionally available.

Both the starter battery alternator and domestic battery bank alternator work independently of each other, when equipped if the domestic battery bank alternator is disconnected, the engine will still run correctly but the:

- Domestic charge warning lamp will not function
- Warning buzzer will remain on at all times.

NB: The two way plug on panel loom will only have a corresponding socket to connect into from the engine if a 2nd alternator is fitted which requires this connection. Engines with only one alternator do not utilise this connection.

ELECTRICAL TROUBLE SHOOTING - ALL CONTROL PANELS

Before investigating any specific electrical problem, always check:

- The connection between the panel harness and panel loom. It must be clean, dry and secured with a cable tie.
- The start battery is connected to the correct terminal on the starter motor.
- The domestic battery is switched on and connected to the correct terminals for the secondary domestic battery charging alternator.
- The battery connections and inspect the condition of cables from the battery to engine. If in doubt measure the voltage at the engine.
- If there is a starter alternator charge problem, measure battery voltage with engine off and again with engine running, if there is an increase the alternator is functioning correctly.

Problem	Possible Cause and Solution
No warning lights or buzzer functioning, engine will not start or stop	• Battery isolation switch in off position - **switch on.** • Starter battery discharged - **charge.** • Engine fuse blown - **check fuse** (above starter motor or flywheel housing) and replace if necessary. • Check for wiring faults.
Non function of warning light. **The water temperature light will not function unless engine is overheating or there is a wiring fault**	• Disconnect switch wire to non-functioning light: green/blue –water temperature, white/brown –oil pressure, brown/yellow –alternator charge. Reconnect wire temporarily to another warning light that is functioning; if wire switches light on replace faulty light. • Disconnect positive feed to non-functioning light. Reconnect temporarily with wire from another warning light that is functioning, if wire switches light on rewire with new connection. • If none of the above, check continuity of connections from panel to the engine.
Water temperature warning light on when engine is not over temperature (Not B or C deluxe panel see table on on following page)	**If engine is cold:** • Faulty wiring, check connection and continuity (small green/blue) from switch to panel light. Ensure this connection is not shorting to earth (ground). • Faulty temperature switch - if light switches off on **If engine is warm:** • Switch wire connected to large sender terminal of switch/sender unit. Remove and refit to smaller (switch) terminal.

Problem	Possible Cause and Solution
Buzzer not functioning. **The buzzer will not sound for green 'power on' light**	· If light is functioning but buzzer not sounding, check connection and continuity from illuminated warning light (red not green) to buzzer board. · Faulty warning panel buzzer board - **replace.**
Starter battery charge light not functioning	**If tacho not functioning:** · Alternator not connected properly, check continuity of small brown wire from rear of alternator to AC position on keyswitch. · Alternator connected properly, faulty alternator - **replace.** **If tacho functioning correctly:** · Check continuity of small brown/yellow wire from rear of alternator to no charge warning light on rear of panel. · If alternator connected properly, faulty panel warning light - **replace.**
If tacho not functioning	· Check connections on rear of tacho, especially black/ blue wire, terminal '4'. · Check connection of black/blue wire on rear of 1st alternator (W connection, usually a bullet on flying lead, or lowest connection on alternators with 3 pin coupler). · Check continuity of black/blue wire from alternator to tacho. · Measure voltage from alternator W connection to earth (ground), should be approx. 7.5 - 9.0 volts AC.
Domestic charge light not functioning, buzzer remains on with engine running	· Domestic battery not connected. · Domestic battery not connected correctly: B+ to domestic isolation block on starboard rail (port on 75 - 115T) B- to engine earth (ground). · Domestic battery flat. · Panel relay faulty/incorrectly wired: Check voltage at relay terminal 86, white wire is positive feed for warning light from AC position of keyswitch.
Domestic charge light not functioning, buzzer switching off with engine running. **This light will only function if a second alternator is fitted to the engine**	· No second alternator fitted to engine, domestic light not used. · D+ (charge indication) light connection at rear of alternator not connected. · Two way plug and socket disconnected between engine harness and panel loom.

ELECTRICAL TROUBLE SHOOTING - B, BW, C AND CW CONTROL PANELS

In addition to the fault finding detailed on the previous pages, the following is specific for control panels as listed above.

Problem	Possible Cause and Solution
Oil pressure warning light not functioning, oil pressure gauge showing maximum deflection. Engine off and keyswitch in run position	· Faulty wiring - check wire connection and continuity (small white/brown) from sender to panel light. · Ensure this connection is not shorting to earth (ground).
Oil pressure gauge showing no movement - even when engine is started. Warning light functioning correctly oil pressure showing no movement, warning light not functioning correctly	· Faulty wiring - check oil pressure sender wire (small white/brown) is connected. · Check connection to oil pressure gauge, if plug is not connected to socket on rear of gauge, reconnect. · If all connections are correctly made, possible faulty sender unit - check resistance to earth, approx. 50 Ω. Replace if no reading or short-circuited. · If adjusted correctly and buzzer still sounding, possible faulty switch gauge unit - **replace.**
Oil pressure showing normal operating pressure (0.75 - 5 bar). Buzzer sounding and light illuminated.	**Engine warm:** · Incorrectly calibrated switching point for warning light, adjust on rear of gauge to 0.5 bar (minimum adjustment on gauge). · If adjusted correctly and buzzer still sounding, faulty switch gauge unit - **replace.**
Water temperature gauge showing 120°C/250°F. **This also applies to the B Panel with Murphy gauge**	**Engine cold/cool:** · Faulty wiring, check water temperature sender wire is not shorting to earth (ground). · Faulty sender unit, - check resistance to earth, approx. 3.5k Ω (cold) – 0.5k Ω (warm). Replace if notably less.
Water temperature gauge showing normal operating temperature (85°C). Buzzer sounding and light illuminated. **This also applies to the B Panel with Murphy gauge**	**Engine warm:** · Incorrectly calibrated switching point for warning light adjust on rear of gauge to 100°C/210°F. · If adjusted correctly and buzzer still sounding, faulty switch gauge unit - **replace.**
Water temperature gauge showing no movement, light not illuminated, engine warm.	· Check connection to sender, if disconnected gauge will not function.
This also applies to the B Panel with Murphy gauge	· Check connection to temperature gauge, if plug is not connected to socket on rear of gauge reconnect. If all connections are correctly made, faulty sender unit - check resistance to earth, approx. 3.5k Ω (cold) - 0.5k Ω (warm). Replace if no reading.

ELECTRICAL TROUBLE SHOOTING - EXTENSION HARNESSES

Some installations require one of the 'panel extension 11-way connectors' to be removed to allow the cable to be passed through bulkheads etc.

If any panel problems are experienced, after this has been done, visually check all 11-way connections on engine harness to panel extension* to ensure wire colours to each terminal match up to the correct colour in its corresponding terminal.

Extra attention must be given to black (ground) and black/blue (tacho), also brown (switched positive to alternator) and brown/yellow (charge fail) as these connections are harder to distinguish between in poorly lit areas. Whilst doing this check integrity of each connection to ensure terminals have not become damaged. Once checked, re-fit cable tie around each connection to keep them secure. Please refer to page 45.

* Also applies for panel to panel extension cables for installations with additional flybridge control panel option.

ELECTRICAL TROUBLE SHOOTING - INSULATED EARTH

If your application is wired as insulated earth return and the engine will not operate correctly, always check starter battery negative is connected to the correct terminal on the isolating solenoid.

It should be connected to the terminal which is also used for all the small black wires. **NB:** Not the terminal with the single black wire connected directly to engine ground.

Section 5: Diagram Index

1. Typical Starter Motor Ratings	Page 7
2. Recommended Engine Started Battery Size	Page 7
3. Beta 10 to 25 HE Engine Harness (40 Amp)	Page 74
4. Beta 10 to 25 HE Engine Harness (75 Amp)	Page 75
5. Beta 10 to 25 HE Engine Harness (120 Amp)	Page 76
6. Beta 10 to 25 HE Engine Harness (55 Amp Insulated Return)	Page 77
7. Beta 30 to 45T HE Engine Harness (70 Amp)	Page 78
8. Beta 30 to 45T HE Engine Harness (120 Amp)	Page 79
9. Beta 30 to 45T HE Engine Harness (70 Amp Insulated Return)	Page 80
10. Beta 43 to 60 HE Engine Harness (70 Amp)	Page 81
11. Beta 43 to 60 HE Engine Harness (120 Amp)	Page 82
12. Beta 43 to 60 HE Engine Harness (175 Amp)	Page 83
13. Beta 43 to 60 HE Engine Harness (70 Amp Insulated Return)	Page 84
14. Beta 43 to 60 HE Engine Harness (100 Amp Insulated Return)	Page 85
15. Beta 43 to 60 HE Engine Harness (175 Amp Secondary)	Page 86
16. Beta 70T & 85T HE Engine Harness (70 Amp)	Page 87
17. Beta 70T & 85T HE Engine Harness (120 Amp)	Page 88
18. Beta 70T & 85T HE Engine Harness (70 Amp Insulated Return)	Page 89
19. Beta 70T & 85T HE Engine Harness (100 Amp Insulated Return)	Page 90
20. Beta 70T & 85T HE Engine Harness (175 Amp Secondary Return)	Page 91
21. Beta 75, 90T, 105T & 115T HE Engine Harness (70 Amp)	Page 92
22. Beta 75, 90T, 105T & 115T HE Engine Harness (120 Amp)	Page 93
23. Beta 75, 90T, 105T & 115T HE Engine Harness (175 Amp)	Page 94
24. Beta 75, 90T, 105T & 115T HE Engine Harness (70 Amp Insulated Return)	Page 95
25. Beta 75, 90T, 105T & 115T HE Engine Harness (100 Amp Insulated Return)	Page 96
26. Beta 75, 90T, 105T & 115T HE Engine Harness (175 Amp Secondary)	Page 97
27. Extended Harness	Page 98
28. Extended 4m Harness Starter Relay	Page 99
29. Split Charge Relay System	Page 100
30. Electric Fuel Lift Pump	Page 101
31. Diagram of Panel 'A' & Cut-out	Page 102 & 103
32. Diagram of Panel 'AB' & Cut-out	Page 104 & 105
33. Diagram of Panel 'ABV' & Cut-out	Page 106 & 107
34. Diagram of Panel 'ABVW' & Cut-out	Page 108 & 109
35. Diagram of Panel 'B' & Cut-out	Page 110 & 111
36. Diagram of Panel 'BW' & Cut-out	Page 112 & 113
37. Diagram of Deluxe Panel 'C' & Cut-out	Page 114 & 115
38. Diagram of Deluxe Panel 'CW' & Cut-out	Page 116 & 117

NB: Further information and arrangement drawings can be found on our website at: **www.betamarine.co.uk**

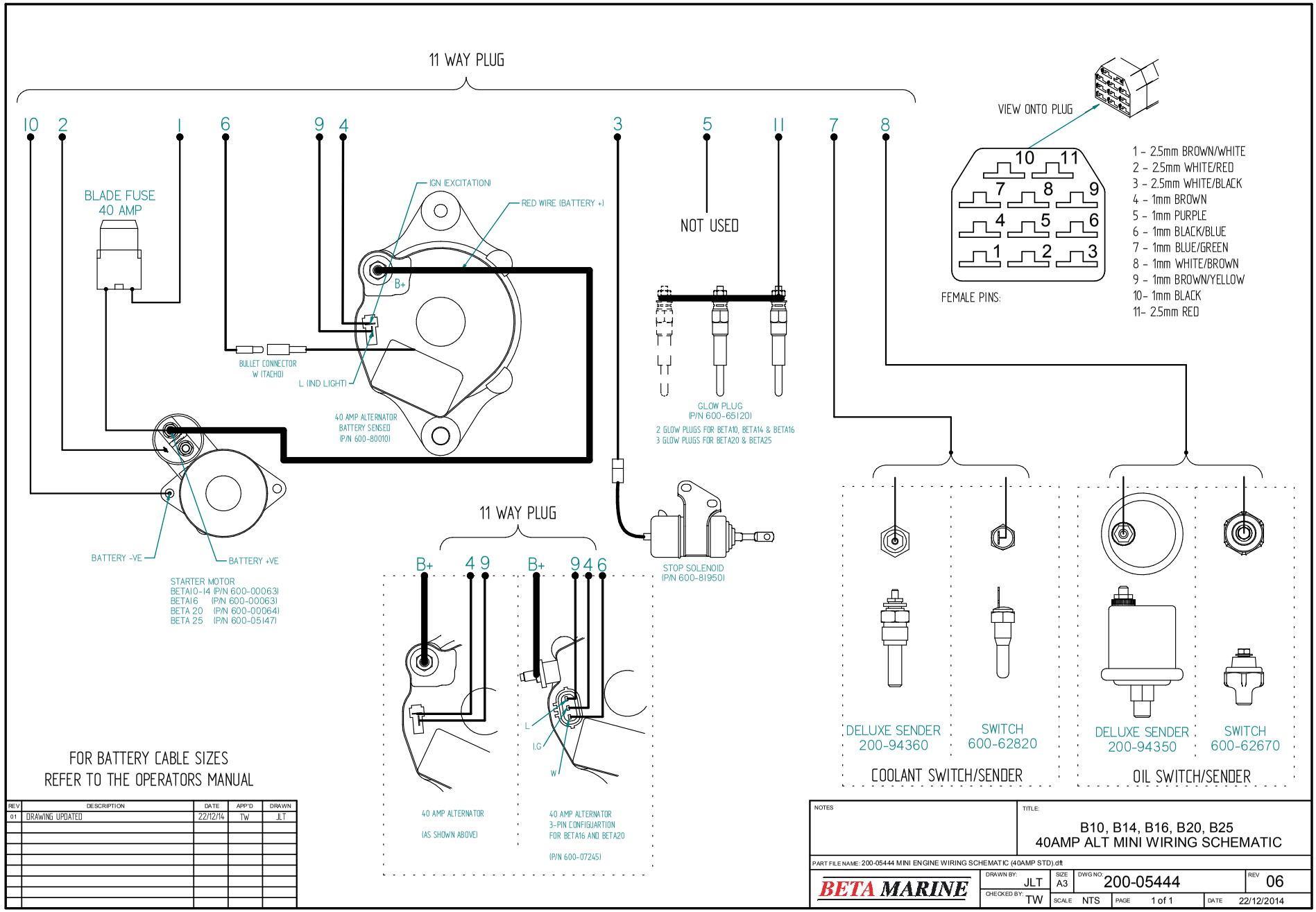

FOR BATTERY CABLE SIZES
REFER TO THE OPERATORS MANUAL

REV	DESCRIPTION	DATE	APP'D	DRAWN
01	DRAWING UPDATED	22/12/14	TW	JLT

NOTES

TITLE:
B10, B14, B16, B20, B25
40AMP ALT MINI WIRING SCHEMATIC

PART FILE NAME: 200-05444 MINI ENGINE WIRING SCHEMATIC (40AMP STD).dft

BETA MARINE

DRAWN BY: JLT	SIZE A3	DWG NO. 200-05444	REV 06
CHECKED BY: TW	SCALE NTS	PAGE 1 of 1	DATE 22/12/2014

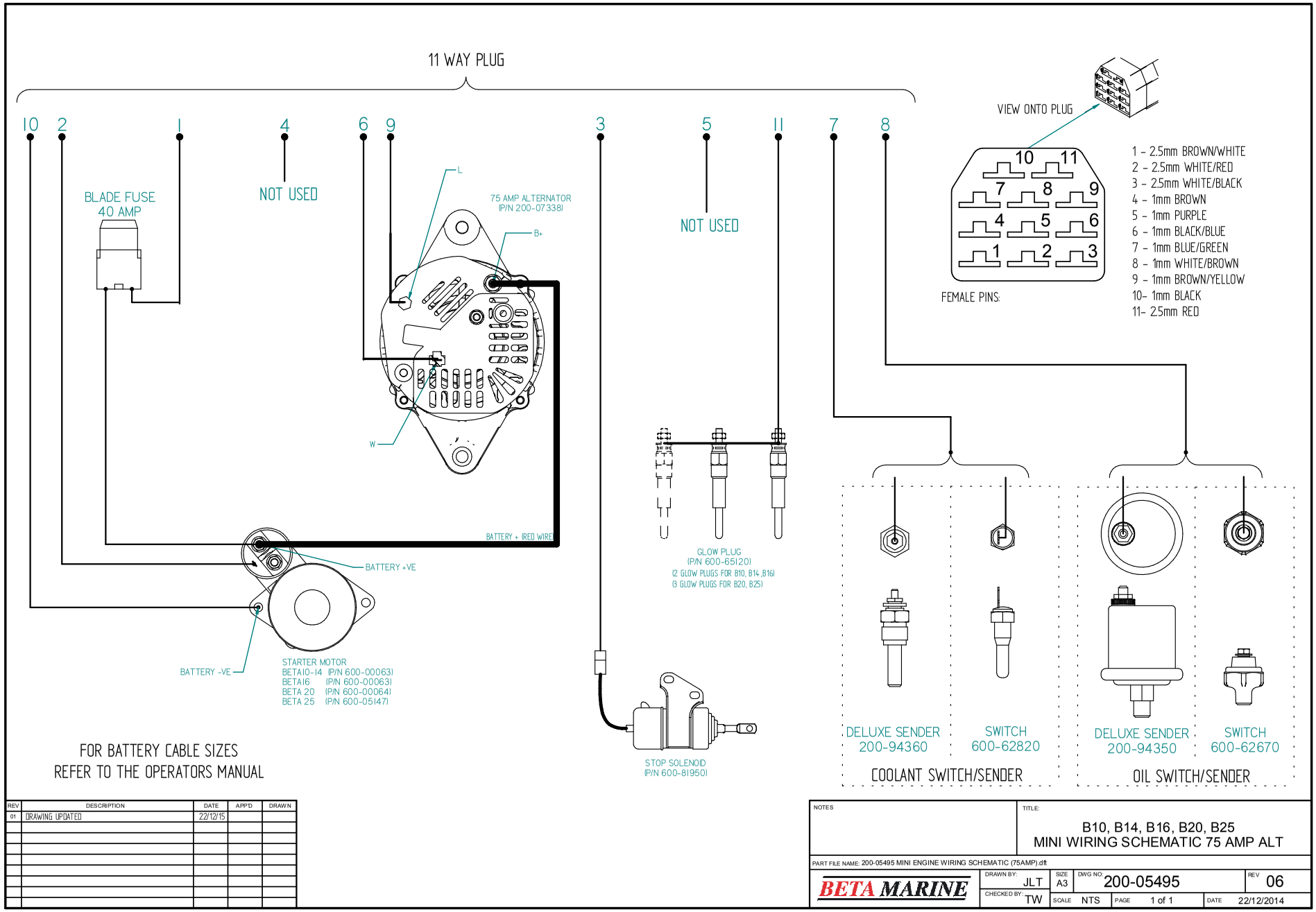

REV	DESCRIPTION	DATE	APP'D	DRAWN
01	DRAWING UPDATED	22/12/15		

NOTES

TITLE:

B10, B14, B16, B20, B25
MINI WIRING SCHEMATIC 75 AMP ALT

PART FILE NAME: 200-05495 MINI ENGINE WIRING SCHEMATIC (75AMP).dft

BETA MARINE

DRAWN BY:	JLT	SIZE	A3	DWG NO	200-05495	REV	06
CHECKED BY:	TW	SCALE	NTS	PAGE	1 of 1	DATE	22/12/2014

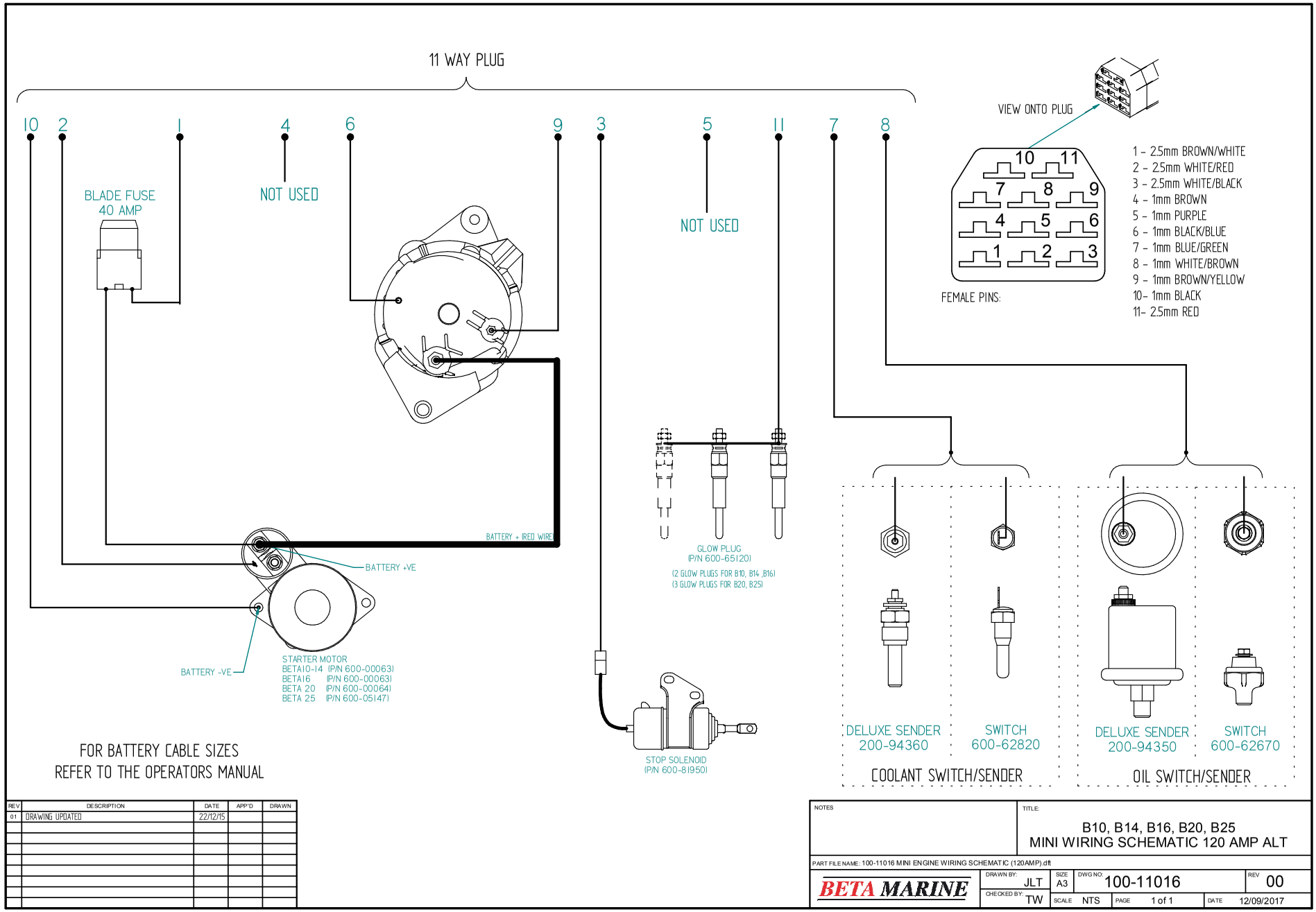

FOR BATTERY CABLE SIZES
REFER TO THE OPERATORS MANUAL

REV	DESCRIPTION	DATE	APP'D	DRAWN
01	DRAWING UPDATED	22/12/15		

NOTES

TITLE:
B10, B14, B16, B20, B25
MINI WIRING SCHEMATIC 120 AMP ALT

PART FILE NAME: 100-11016 MINI ENGINE WIRING SCHEMATIC (120AMP).dft

BETA MARINE

DRAWN BY: JLT	SIZE A3	DWG NO: 100-11016	REV 00
CHECKED BY: TW	SCALE NTS	PAGE 1 of 1	DATE 12/09/2017

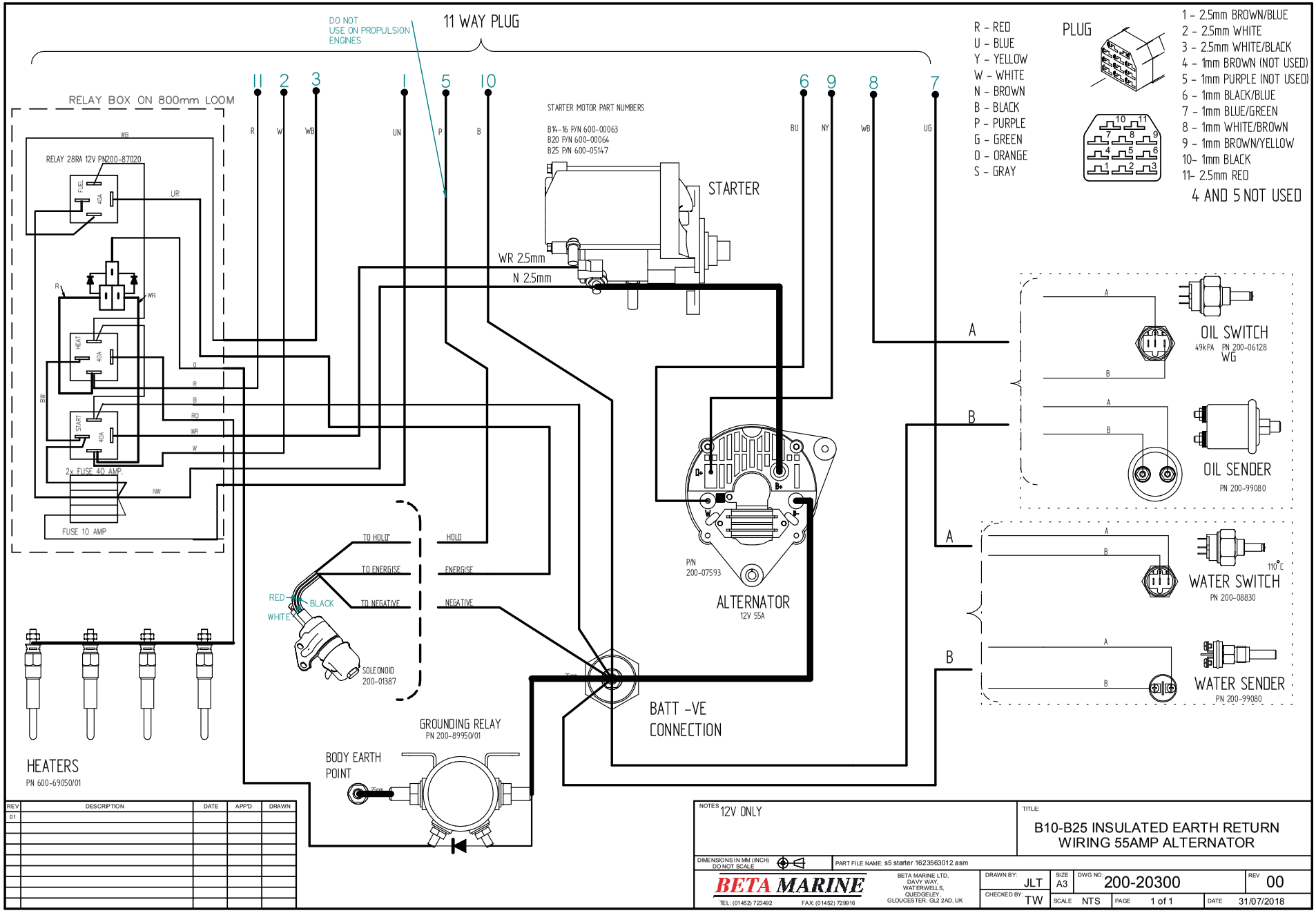

REV	DESCRIPTION	DATE	APP'D	DRAWN
01				

NOTES 12V ONLY

TITLE: B10-B25 INSULATED EARTH RETURN WIRING 55AMP ALTERNATOR

DIMENSIONS IN MM (INCH) DO NOT SCALE

PART FILE NAME: s5 starter 1623563012.asm

BETA MARINE

BETA MARINE LTD, DAVY WAY, WATERWELLS, QUEDGELEY, GLOUCESTER. GL2 2AD, UK

TEL: (01452) 723492 FAX: (01452) 729916

DRAWN BY:	SIZE	DWG NO:	REV
JLT	A3	200-20300	00
CHECKED BY: TW	SCALE NTS	PAGE 1 of 1	DATE 31/07/2018

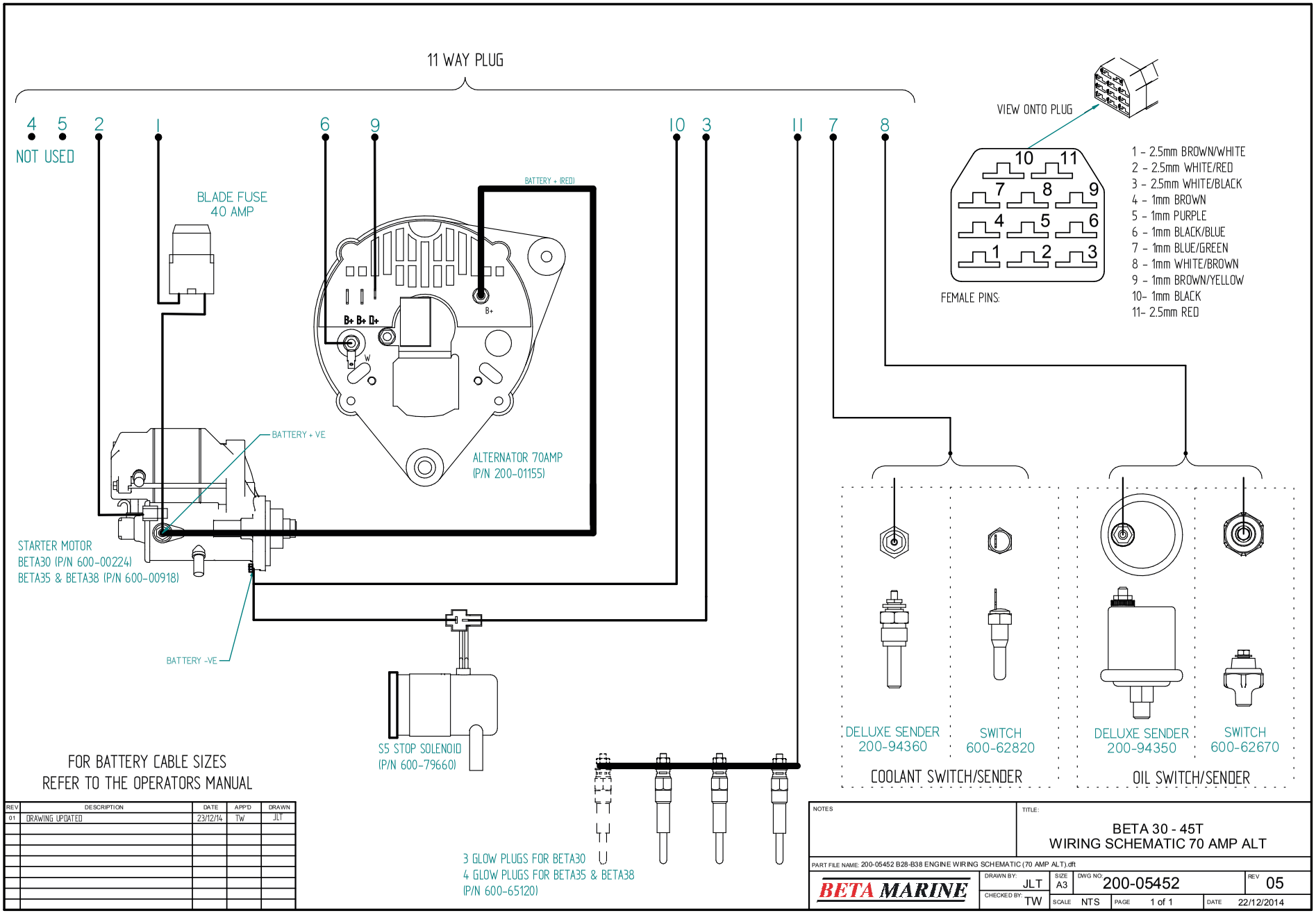
11 WAY PLUG
4 5 2 1 6 9 10 3 11 7 8
NOT USED
BLADE FUSE
40 AMP
BATTERY + (RED)
B+ B+ D+
B+
W
BATTERY + VE
ALTERNATOR 70AMP
(P/N 200-01155)
STARTER MOTOR
BETA30 (P/N 600-00224)
BETA35 & BETA38 (P/N 600-00918)
BATTERY -VE
S5 STOP SOLENOID
(P/N 600-79660)
3 GLOW PLUGS FOR BETA30
4 GLOW PLUGS FOR BETA35 & BETA38
(P/N 600-65120)
VIEW ONTO PLUG
10 11
7 8 9
4 5 6
1 2 3
FEMALE PINS:
1 - 2.5mm BROWN/WHITE
2 - 2.5mm WHITE/RED
3 - 2.5mm WHITE/BLACK
4 - 1mm BROWN
5 - 1mm PURPLE
6 - 1mm BLACK/BLUE
7 - 1mm BLUE/GREEN
8 - 1mm WHITE/BROWN
9 - 1mm BROWN/YELLOW
10- 1mm BLACK
11- 2.5mm RED
DELUXE SENDER
200-94360
SWITCH
600-62820
COOLANT SWITCH/SENDER
DELUXE SENDER
200-94350
SWITCH
600-62670
OIL SWITCH/SENDER
FOR BATTERY CABLE SIZES
REFER TO THE OPERATORS MANUAL
REV | DESCRIPTION | DATE | APP'D | DRAWN
01 | DRAWING UPDATED | 23/12/14 | TW | JLT
NOTES
TITLE:
BETA 30 - 45T
WIRING SCHEMATIC 70 AMP ALT
PART FILE NAME: 200-05452 B28-B38 ENGINE WIRING SCHEMATIC (70 AMP ALT).dft
BETA MARINE
DRAWN BY: JLT
CHECKED BY: TW
SIZE A3
DWG NO: 200-05452
REV 05
SCALE NTS
PAGE 1 of 1
DATE 22/12/2014

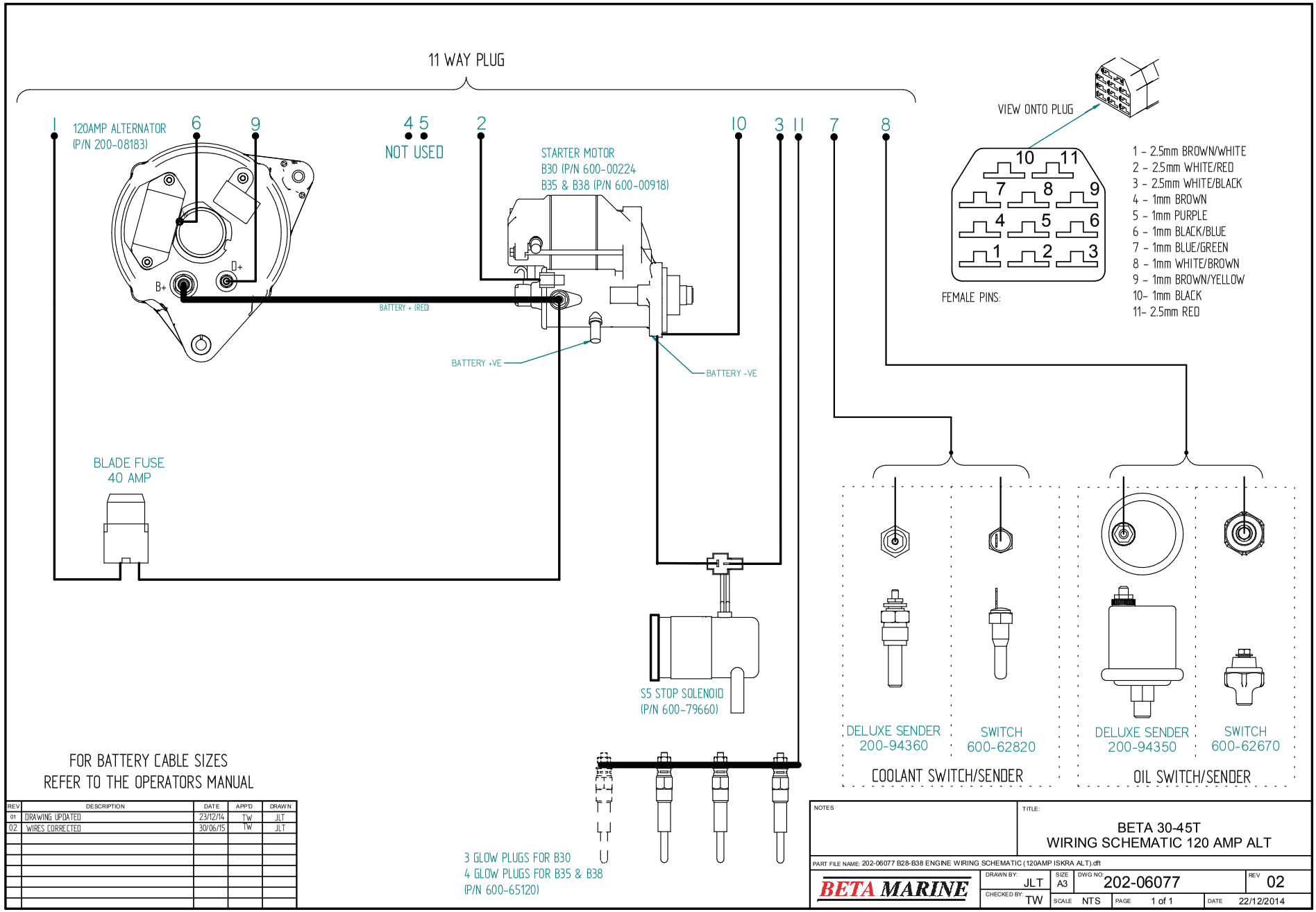

FOR BATTERY CABLE SIZES
REFER TO THE OPERATORS MANUAL

REV	DESCRIPTION	DATE	APP'D	DRAWN
01	DRAWING UPDATED	23/12/14	TW	JLT
02	WIRES CORRECTED	30/06/15	TW	JLT

NOTES

TITLE:
BETA 30-45T
WIRING SCHEMATIC 120 AMP ALT

PART FILE NAME: 202-06077 B28-B38 ENGINE WIRING SCHEMATIC (120AMP ISKRA ALT).dft

BETA MARINE

DRAWN BY:	JLT	SIZE	A3	DWG NO.	202-06077	REV	02
CHECKED BY:	TW	SCALE	NTS	PAGE	1 of 1	DATE	22/12/2014

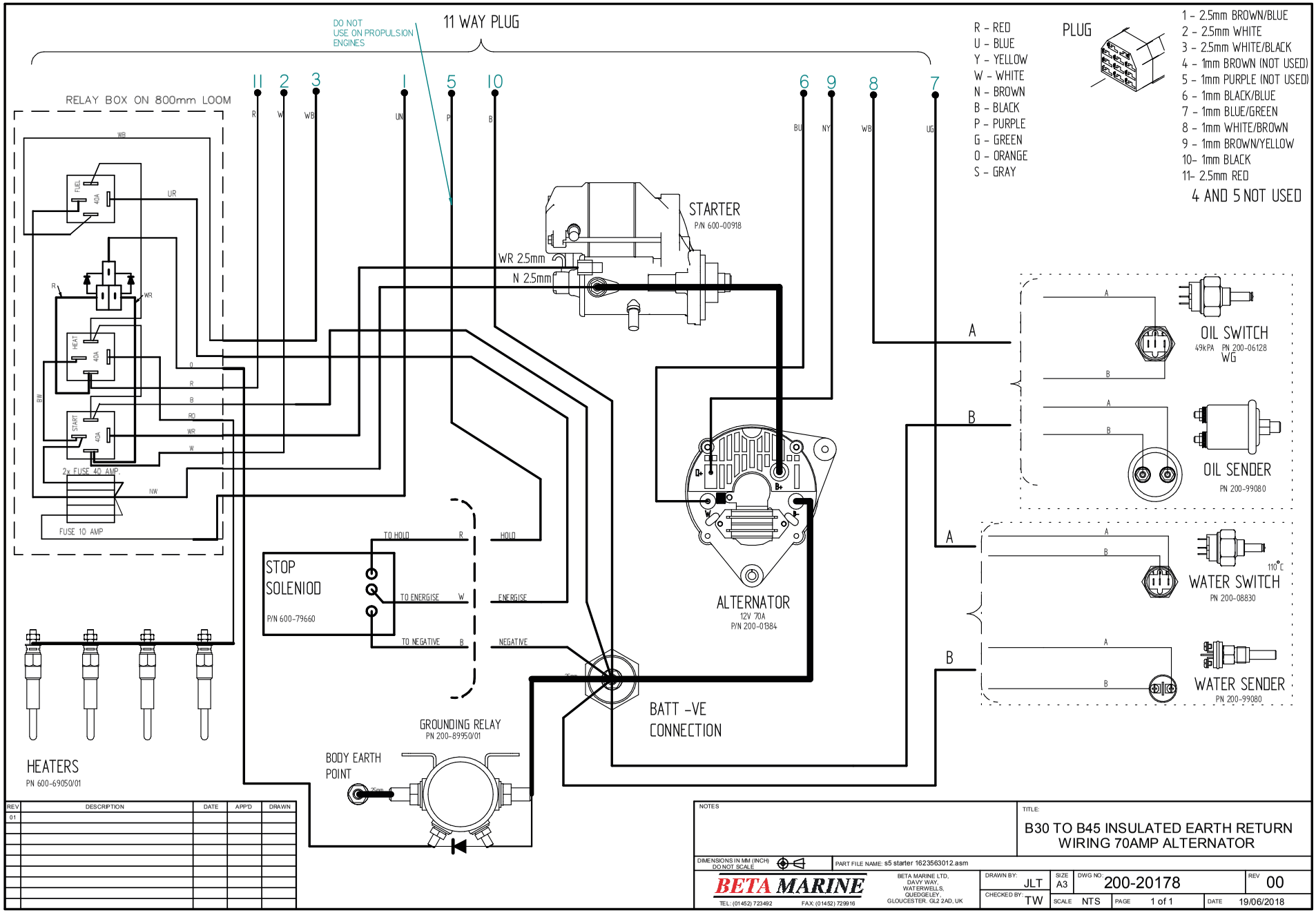

REV	DESCRIPTION	DATE	APP'D	DRAWN
01				

NOTES

TITLE: B30 TO B45 INSULATED EARTH RETURN WIRING 70AMP ALTERNATOR

DIMENSIONS IN MM (INCH) DO NOT SCALE

PART FILE NAME: s5 starter 1623563012.asm

BETA MARINE

TEL: (01452) 723492 FAX: (01452) 729916

BETA MARINE LTD, DAVY WAY, WATERWELLS, QUEDGELEY, GLOUCESTER. GL2 2AD, UK

DRAWN BY:	JLT	SIZE	A3	DWG NO:	200-20178	REV	00
CHECKED BY:	TW	SCALE	NTS	PAGE	1 of 1	DATE	19/06/2018

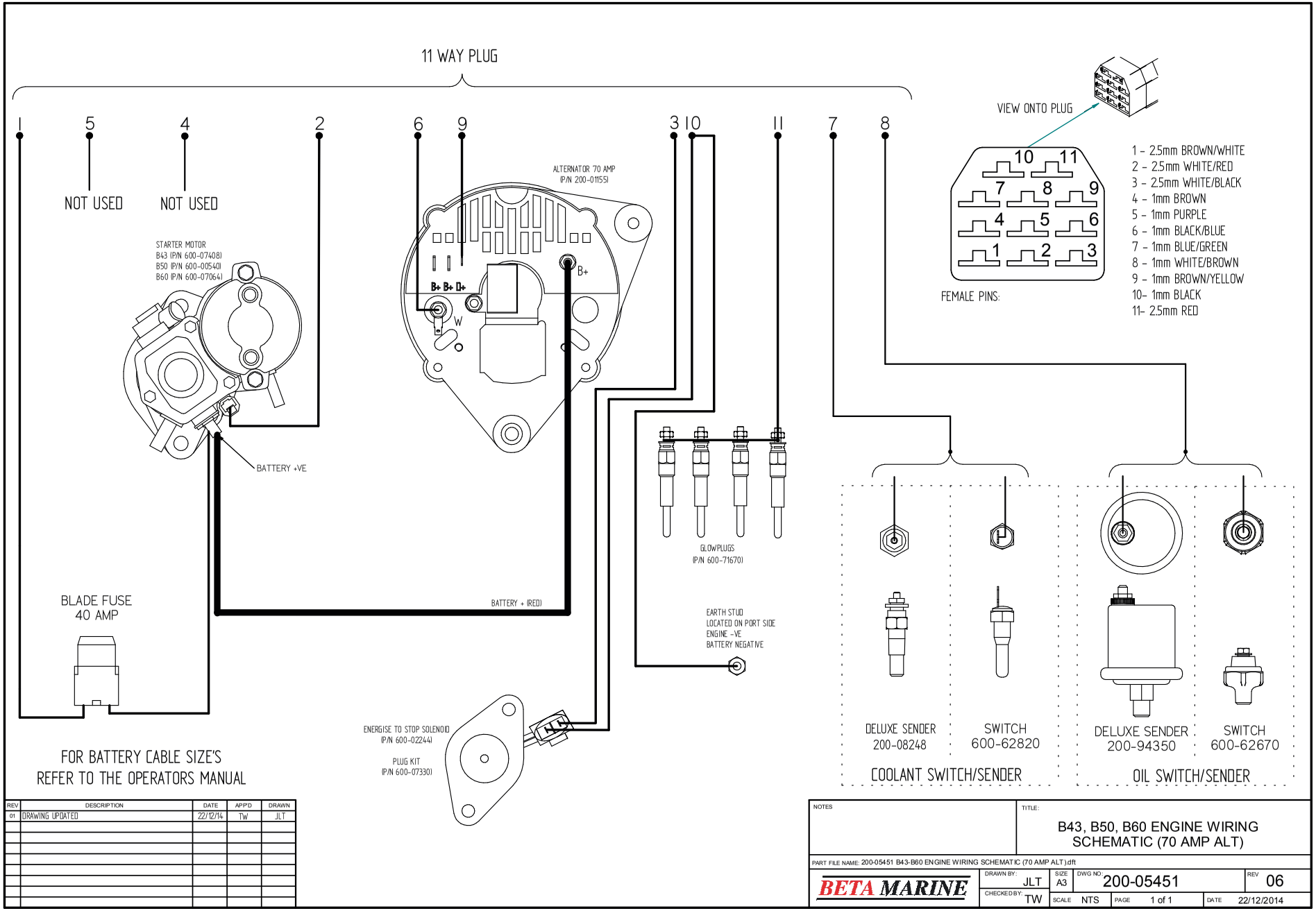

REV	DESCRIPTION	DATE	APP'D	DRAWN
01	DRAWING UPDATED	22/12/14	TW	JLT

NOTES

TITLE: B43, B50, B60 ENGINE WIRING SCHEMATIC (70 AMP ALT)

PART FILE NAME: 200-05451 B43-B60 ENGINE WIRING SCHEMATIC (70 AMP ALT).dft

BETA MARINE

DRAWN BY:	SIZE	DWG NO.	REV
JLT	A3	200-05451	06
CHECKED BY: TW	SCALE NTS	PAGE 1 of 1	DATE 22/12/2014

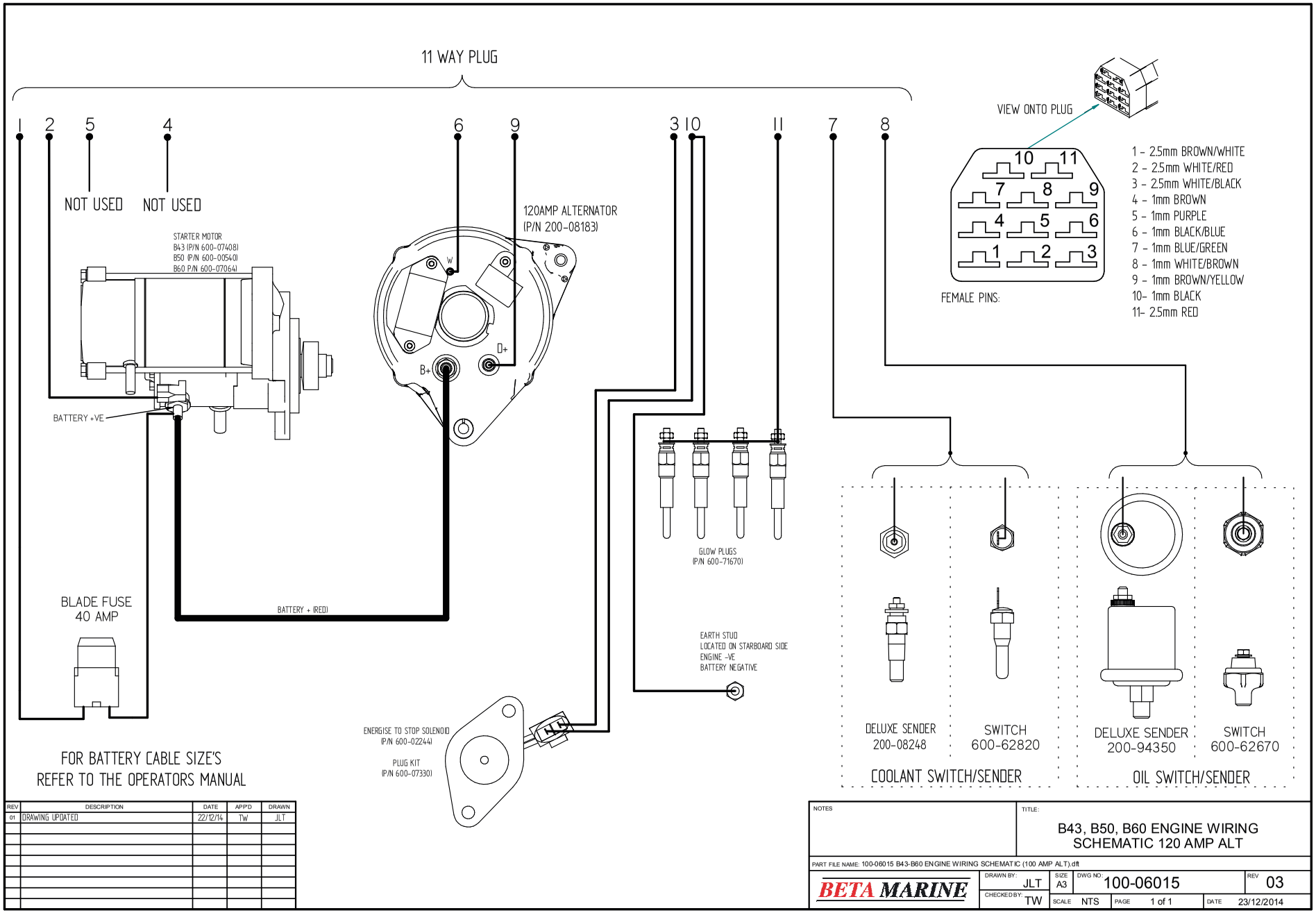

REV	DESCRIPTION	DATE	APP'D	DRAWN
01	DRAWING UPDATED	22/12/14	TW	JLT

NOTES

TITLE: B43, B50, B60 ENGINE WIRING SCHEMATIC 120 AMP ALT

PART FILE NAME: 100-06015 B43-B60 ENGINE WIRING SCHEMATIC (100 AMP ALT).dft

BETA MARINE

DRAWN BY:	SIZE	DWG NO:	REV
JLT	A3	100-06015	03
CHECKED BY: TW	SCALE NTS	PAGE 1 of 1	DATE 23/12/2014

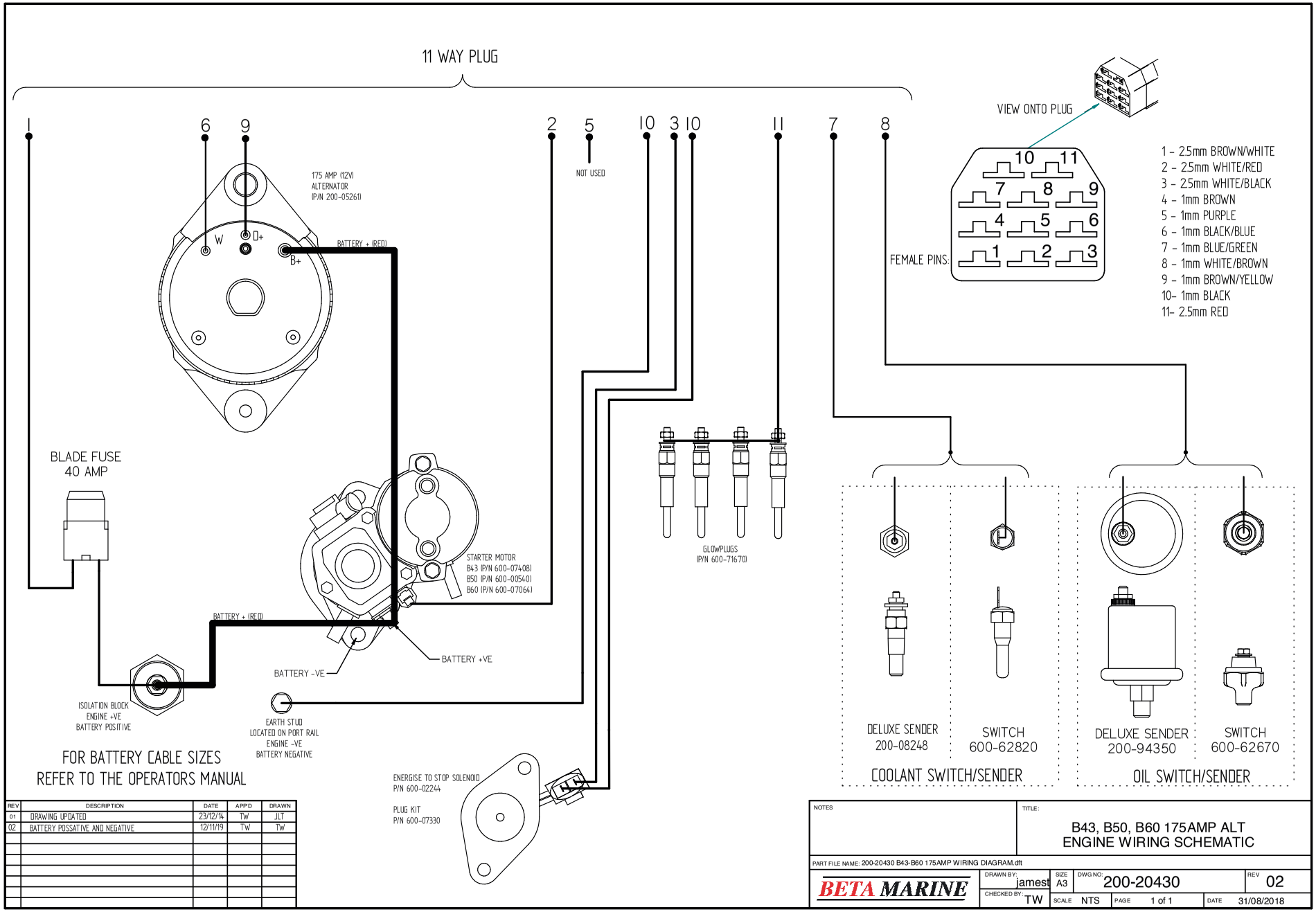

REV	DESCRIPTION	DATE	APP'D	DRAWN
01	DRAWING UPDATED	23/12/14	TW	JLT
02	BATTERY POSSATIVE AND NEGATIVE	12/11/19	TW	TW

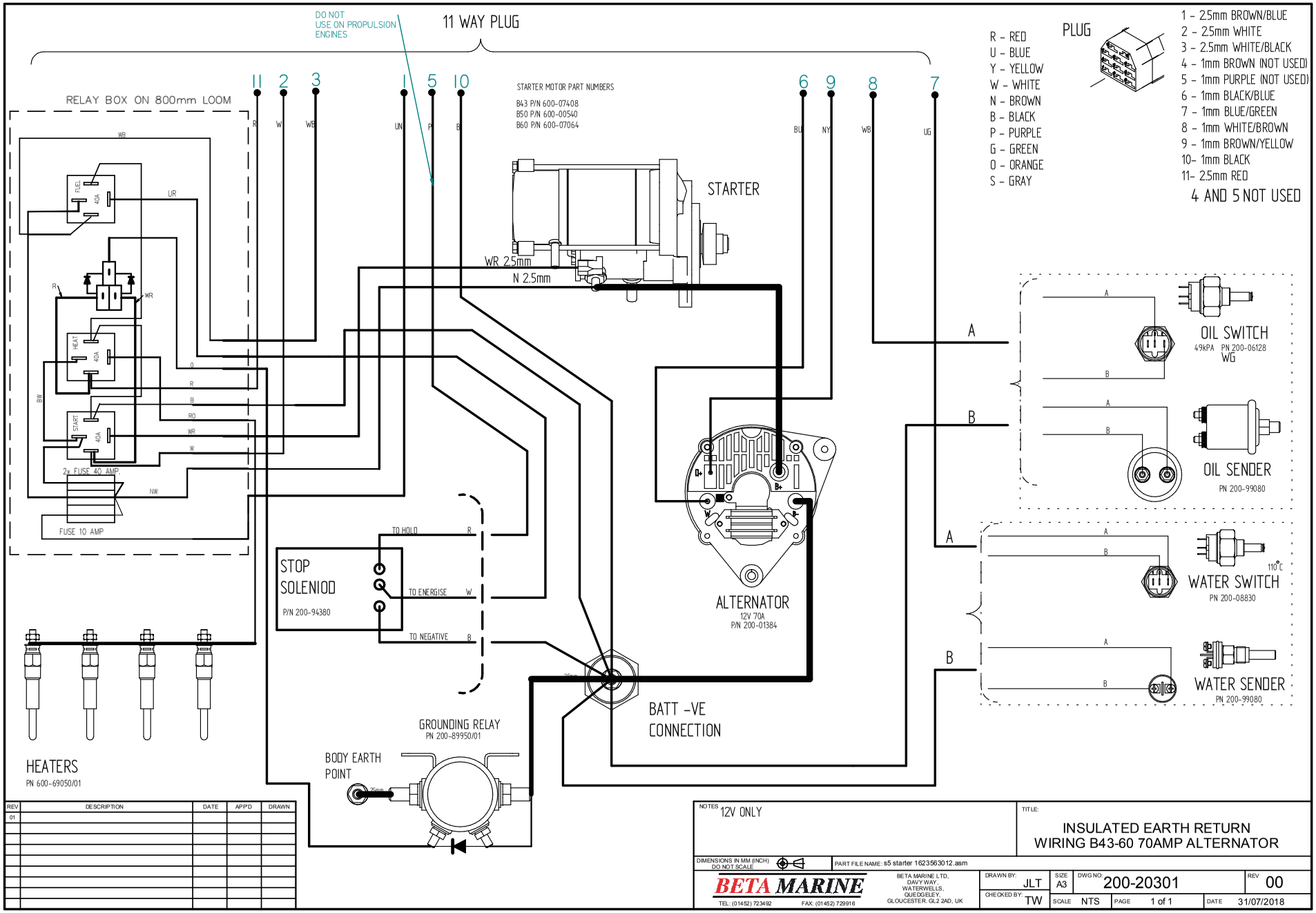
DO NOT USE ON PROPULSION ENGINES
11 WAY PLUG
11 2 3 1 5 10 6 9 8 7
RELAY BOX ON 800mm LOOM
FUEL 40A
HEAT 40A
START 40A
2x FUSE 40 AMP
FUSE 10 AMP
STARTER MOTOR PART NUMBERS
B43 P/N 600-07408
B50 P/N 600-00540
B60 P/N 600-07064
STARTER
WR 2.5mm
N 2.5mm
ALTERNATOR
12V 70A
P/N 200-01384
STOP SOLENIOD
P/N 200-94380
TO HOLD
TO ENERGISE
TO NEGATIVE
GROUNDING RELAY
PN 200-89950/01
BODY EARTH POINT
BATT -VE CONNECTION
HEATERS
PN 600-69050/01
R - RED
U - BLUE
Y - YELLOW
W - WHITE
N - BROWN
B - BLACK
P - PURPLE
G - GREEN
O - ORANGE
S - GRAY
PLUG
1 - 2.5mm BROWN/BLUE
2 - 2.5mm WHITE
3 - 2.5mm WHITE/BLACK
4 - 1mm BROWN (NOT USED)
5 - 1mm PURPLE (NOT USED)
6 - 1mm BLACK/BLUE
7 - 1mm BLUE/GREEN
8 - 1mm WHITE/BROWN
9 - 1mm BROWN/YELLOW
10- 1mm BLACK
11- 2.5mm RED
4 AND 5 NOT USED
OIL SWITCH
49kPA PN 200-06128
WG
OIL SENDER
PN 200-99080
WATER SWITCH
110°C
PN 200-08830
WATER SENDER
PN 200-99080
NOTES 12V ONLY
TITLE:
INSULATED EARTH RETURN
WIRING B43-60 70AMP ALTERNATOR
DIMENSIONS IN MM (INCH) DO NOT SCALE
PART FILE NAME: s5 starter 1623563012.asm
BETA MARINE
TEL: (01452) 723492 FAX: (01452) 729916
BETA MARINE LTD, DAVY WAY, WATERWELLS, QUEDGELEY, GLOUCESTER. GL2 2AD, UK
DRAWN BY: JLT
CHECKED BY: TW
SIZE A3
DWG NO. 200-20301
REV 00
SCALE NTS
PAGE 1 of 1
DATE 31/07/2018
REV DESCRIPTION DATE APP'D DRAWN
01

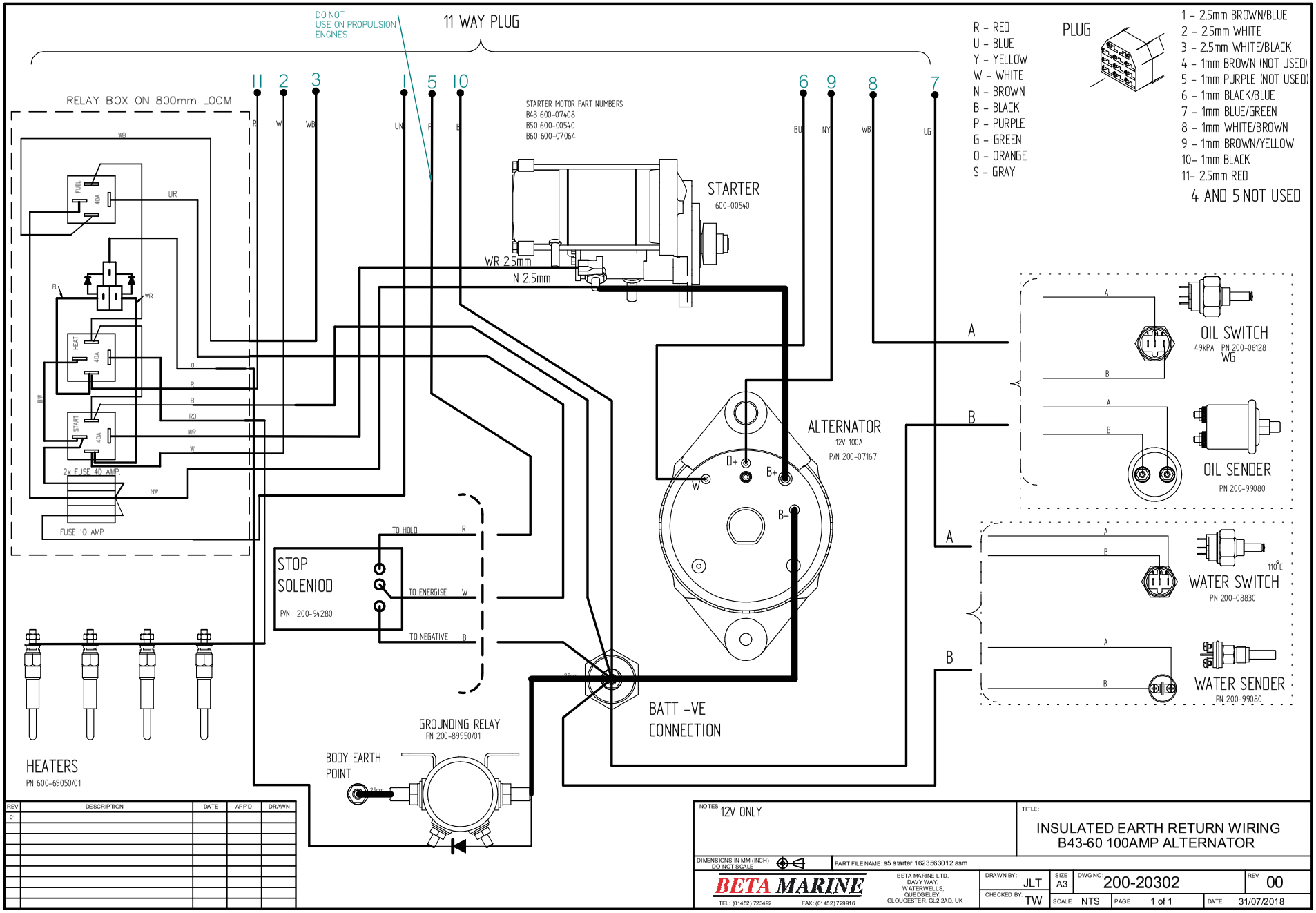
DO NOT USE ON PROPULSION ENGINES
11 WAY PLUG
11 2 3 1 5 10 6 9 8 7
RELAY BOX ON 800mm LOOM
FUEL 40A
HEAT 40A
START 40A
2x FUSE 40 AMP
FUSE 10 AMP
STARTER MOTOR PART NUMBERS
B43 600-07408
B50 600-00540
B60 600-07064
STARTER
600-00540
WR 2.5mm
N 2.5mm
ALTERNATOR
12V 100A
P/N 200-07167
D+
B+
B-
W
STOP SOLENIOD
P/N 200-94280
TO HOLD
TO ENERGISE
TO NEGATIVE
GROUNDING RELAY
PN 200-89950/01
BODY EARTH POINT
BATT -VE CONNECTION
HEATERS
PN 600-69050/01
R - RED
U - BLUE
Y - YELLOW
W - WHITE
N - BROWN
B - BLACK
P - PURPLE
G - GREEN
O - ORANGE
S - GRAY
PLUG
1 - 2.5mm BROWN/BLUE
2 - 2.5mm WHITE
3 - 2.5mm WHITE/BLACK
4 - 1mm BROWN (NOT USED)
5 - 1mm PURPLE (NOT USED)
6 - 1mm BLACK/BLUE
7 - 1mm BLUE/GREEN
8 - 1mm WHITE/BROWN
9 - 1mm BROWN/YELLOW
10- 1mm BLACK
11- 2.5mm RED
4 AND 5 NOT USED
OIL SWITCH
49kPA PN 200-06128
WG
OIL SENDER
PN 200-99080
WATER SWITCH
110°C
PN 200-08830
WATER SENDER
PN 200-99080
NOTES 12V ONLY
TITLE:
INSULATED EARTH RETURN WIRING
B43-60 100AMP ALTERNATOR
DIMENSIONS IN MM (INCH) DO NOT SCALE
PART FILE NAME: s5 starter 1623563012.asm
BETA MARINE
BETA MARINE LTD, DAVY WAY, WATERWELLS, QUEDGELEY, GLOUCESTER. GL2 2AD, UK
TEL: (01452) 723492 FAX: (01452) 729916
DRAWN BY: JLT
CHECKED BY: TW
SIZE A3
DWG NO: 200-20302
REV 00
SCALE NTS
PAGE 1 of 1
DATE 31/07/2018
REV DESCRIPTION DATE APP'D DRAWN
01

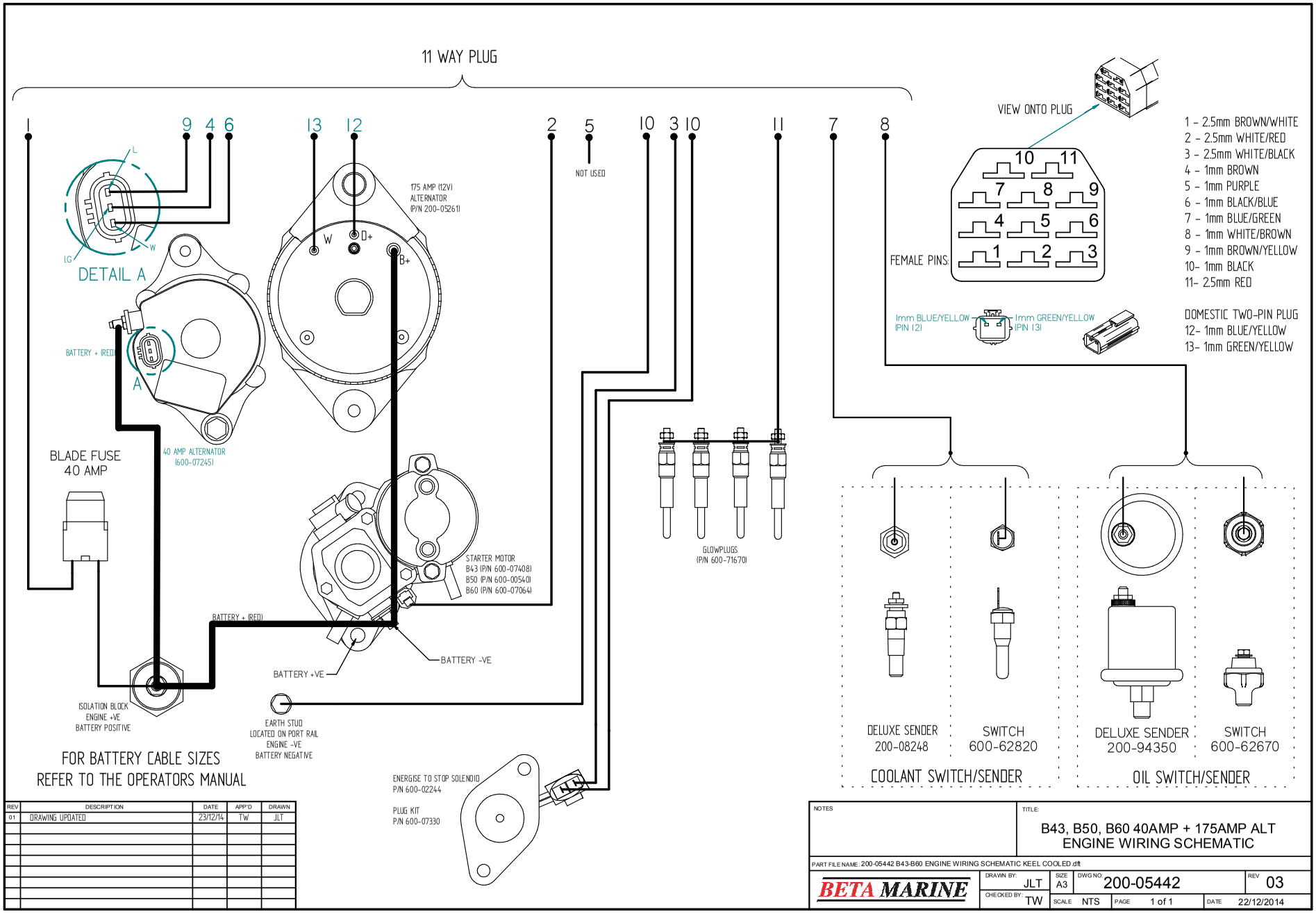

REV	DESCRIPTION	DATE	APP'D	DRAWN
01	DRAWING UPDATED	23/12/14	TW	JLT

NOTES

TITLE: B43, B50, B60 40AMP + 175AMP ALT ENGINE WIRING SCHEMATIC

PART FILE NAME: 200-05442 B43-B60 ENGINE WIRING SCHEMATIC KEEL COOLED.dft

BETA MARINE

DRAWN BY:	SIZE	DWG NO.	REV
JLT	A3	200-05442	03
CHECKED BY: TW	SCALE NTS	PAGE 1 of 1	DATE 22/12/2014

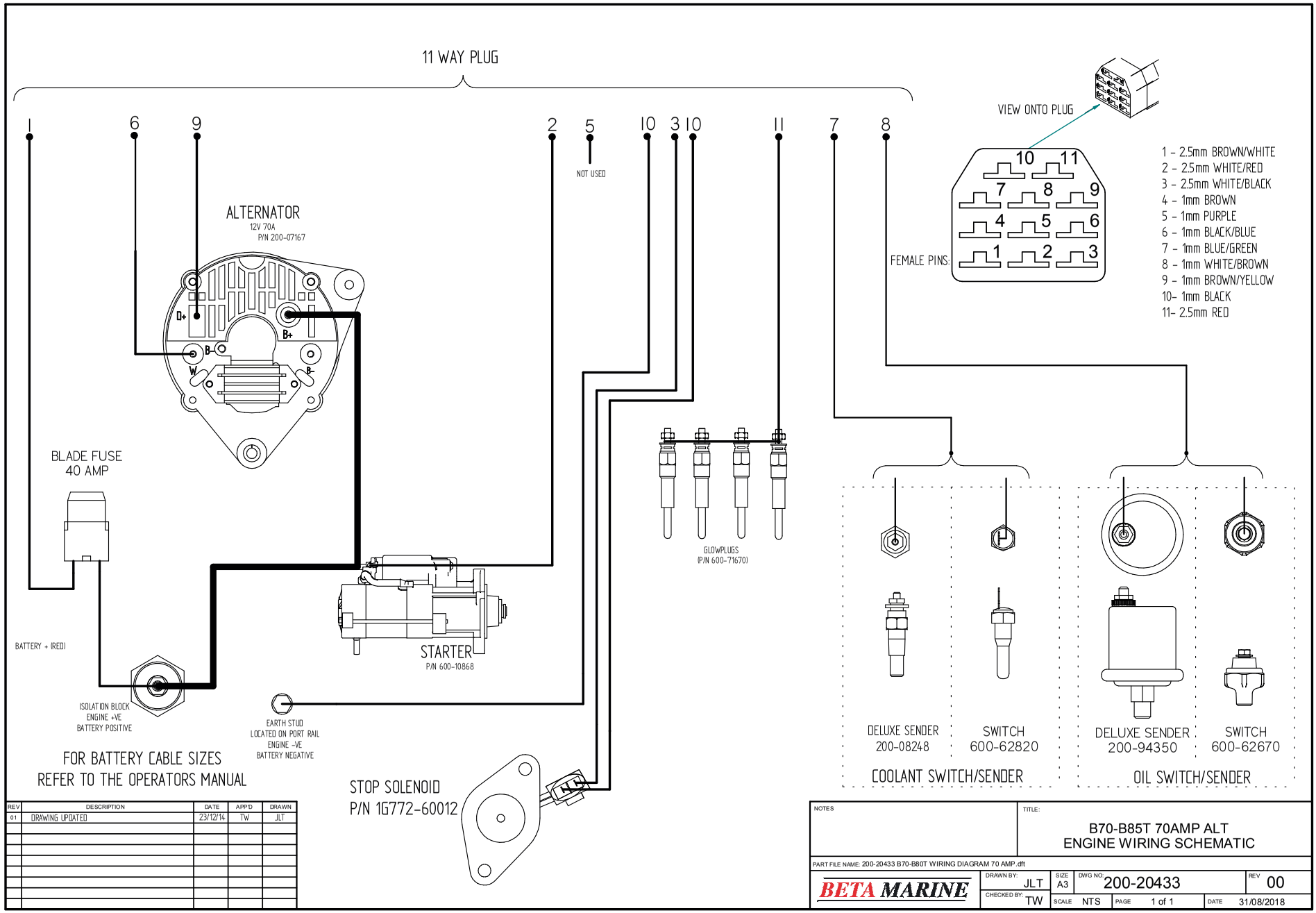

REV	DESCRIPTION	DATE	APP'D	DRAWN
01	DRAWING UPDATED	23/12/14	TW	JLT

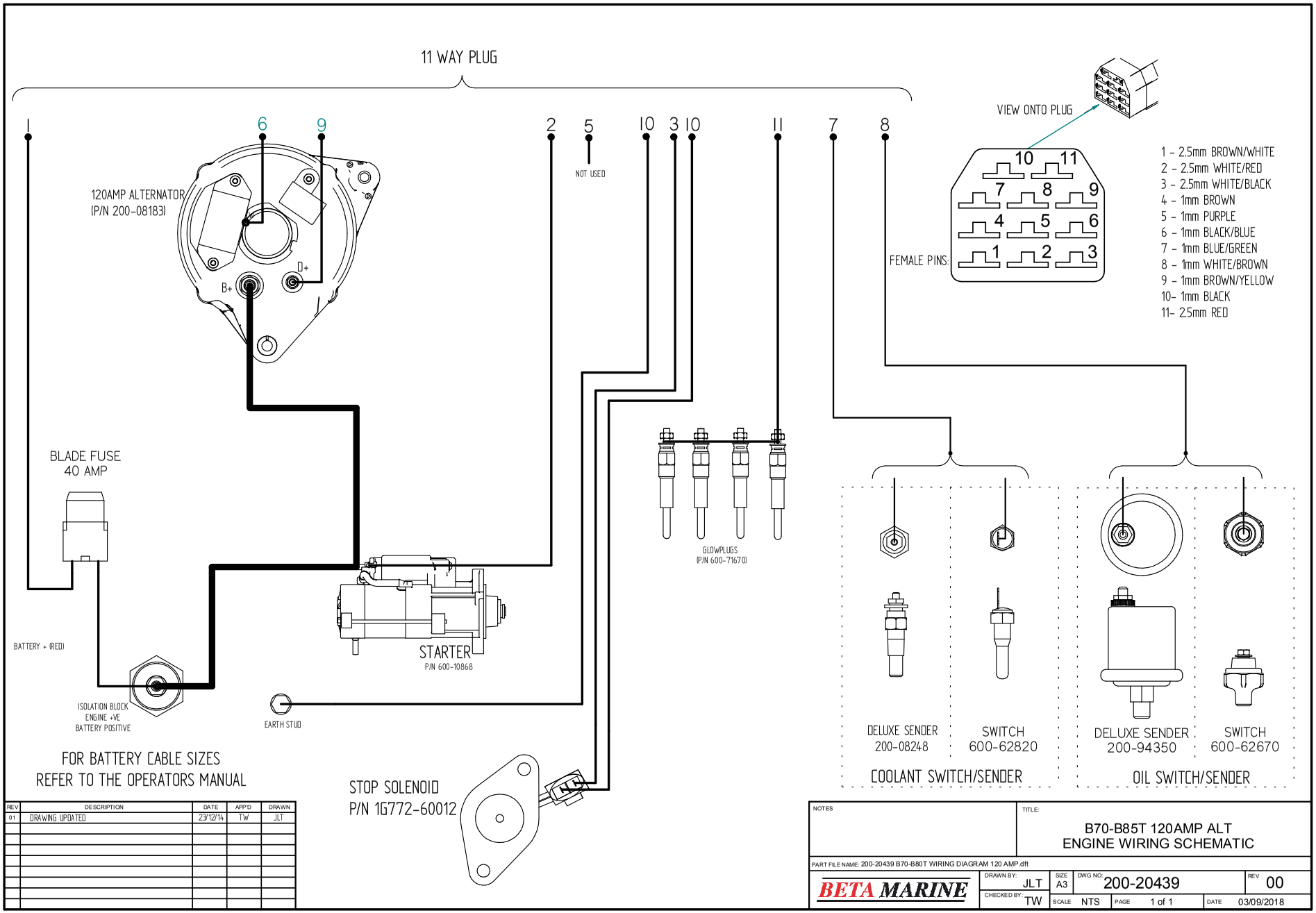

REV	DESCRIPTION	DATE	APP'D	DRAWN
01	DRAWING UPDATED	23/12/14	TW	JLT

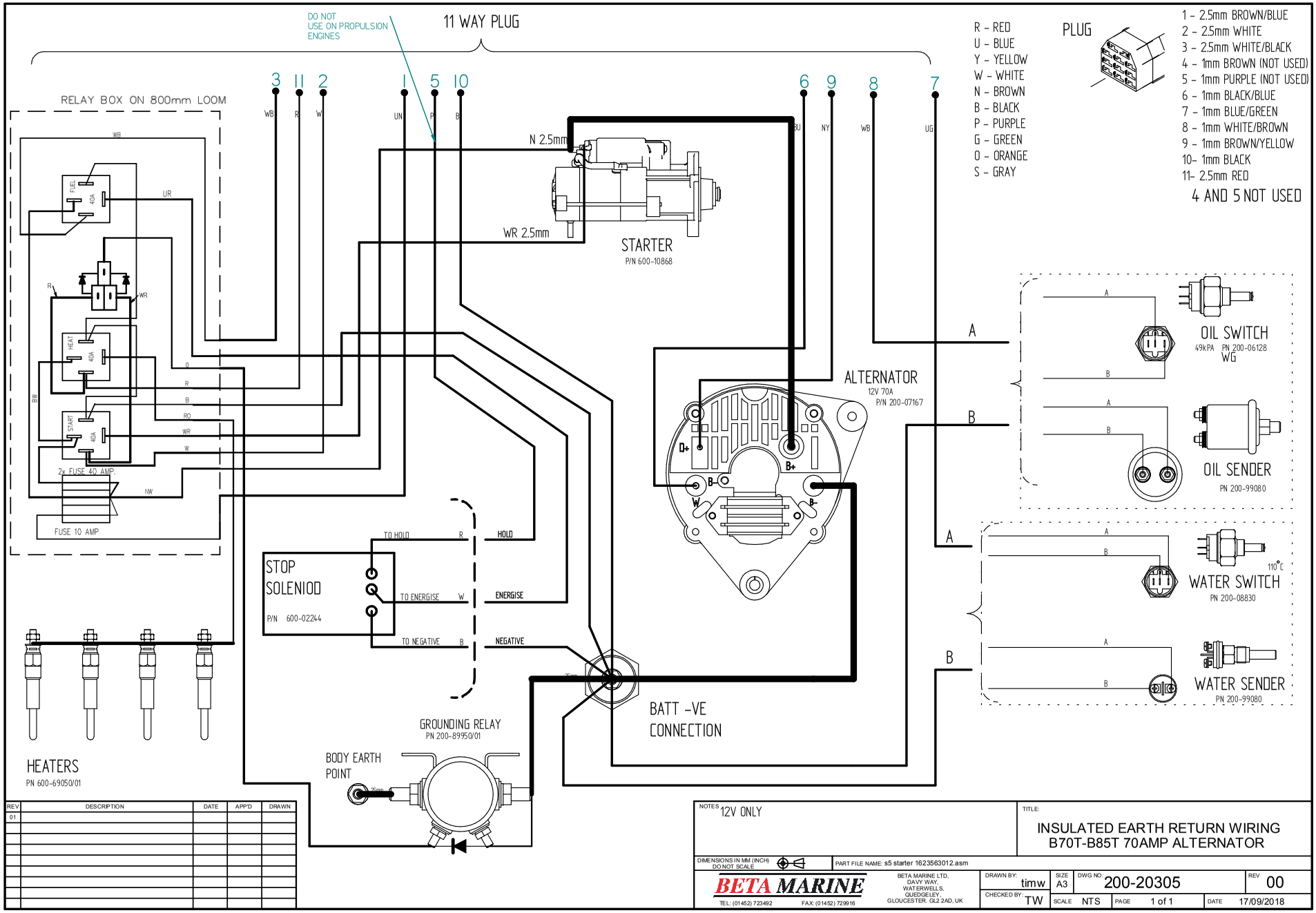
11 WAY PLUG
DO NOT USE ON PROPULSION ENGINES
3 11 2 1 5 10 6 9 8 7
RELAY BOX ON 800mm LOOM
FUEL 40A
HEAT 40A
START 40A
2x FUSE 40 AMP
FUSE 10 AMP
N 2.5mm
WR 2.5mm
STARTER
P/N 600-10868
ALTERNATOR
12V 70A
P/N 200-07167
D+
B+
B-
W
STOP SOLENIOD
P/N 600-02244
TO HOLD
TO ENERGISE
TO NEGATIVE
HOLD
ENERGISE
NEGATIVE
GROUNDING RELAY
P/N 200-89950/01
BODY EARTH POINT
BATT -VE CONNECTION
HEATERS
P/N 600-69050/01
R - RED
U - BLUE
Y - YELLOW
W - WHITE
N - BROWN
B - BLACK
P - PURPLE
G - GREEN
O - ORANGE
S - GRAY
PLUG
1 - 2.5mm BROWN/BLUE
2 - 2.5mm WHITE
3 - 2.5mm WHITE/BLACK
4 - 1mm BROWN (NOT USED)
5 - 1mm PURPLE (NOT USED)
6 - 1mm BLACK/BLUE
7 - 1mm BLUE/GREEN
8 - 1mm WHITE/BROWN
9 - 1mm BROWN/YELLOW
10- 1mm BLACK
11- 2.5mm RED
4 AND 5 NOT USED
OIL SWITCH
49kPA PN 200-06128
WG
OIL SENDER
PN 200-99080
WATER SWITCH
110°C
PN 200-08830
WATER SENDER
PN 200-99080
NOTES 12V ONLY
TITLE:
INSULATED EARTH RETURN WIRING
B70T-B85T 70AMP ALTERNATOR
DIMENSIONS IN MM (INCH) DO NOT SCALE
PART FILE NAME: s5 starter 1623563012.asm
BETA MARINE
BETA MARINE LTD, DAVY WAY, WATERWELLS, QUEDGELEY, GLOUCESTER. GL2 2AD, UK
TEL: (01452) 723492 FAX: (01452) 729916
DRAWN BY: timw
CHECKED BY: TW
SIZE A3
DWG NO: 200-20305
REV 00
SCALE NTS
PAGE 1 of 1
DATE 17/09/2018
REV DESCRIPTION DATE APP'D DRAWN
01

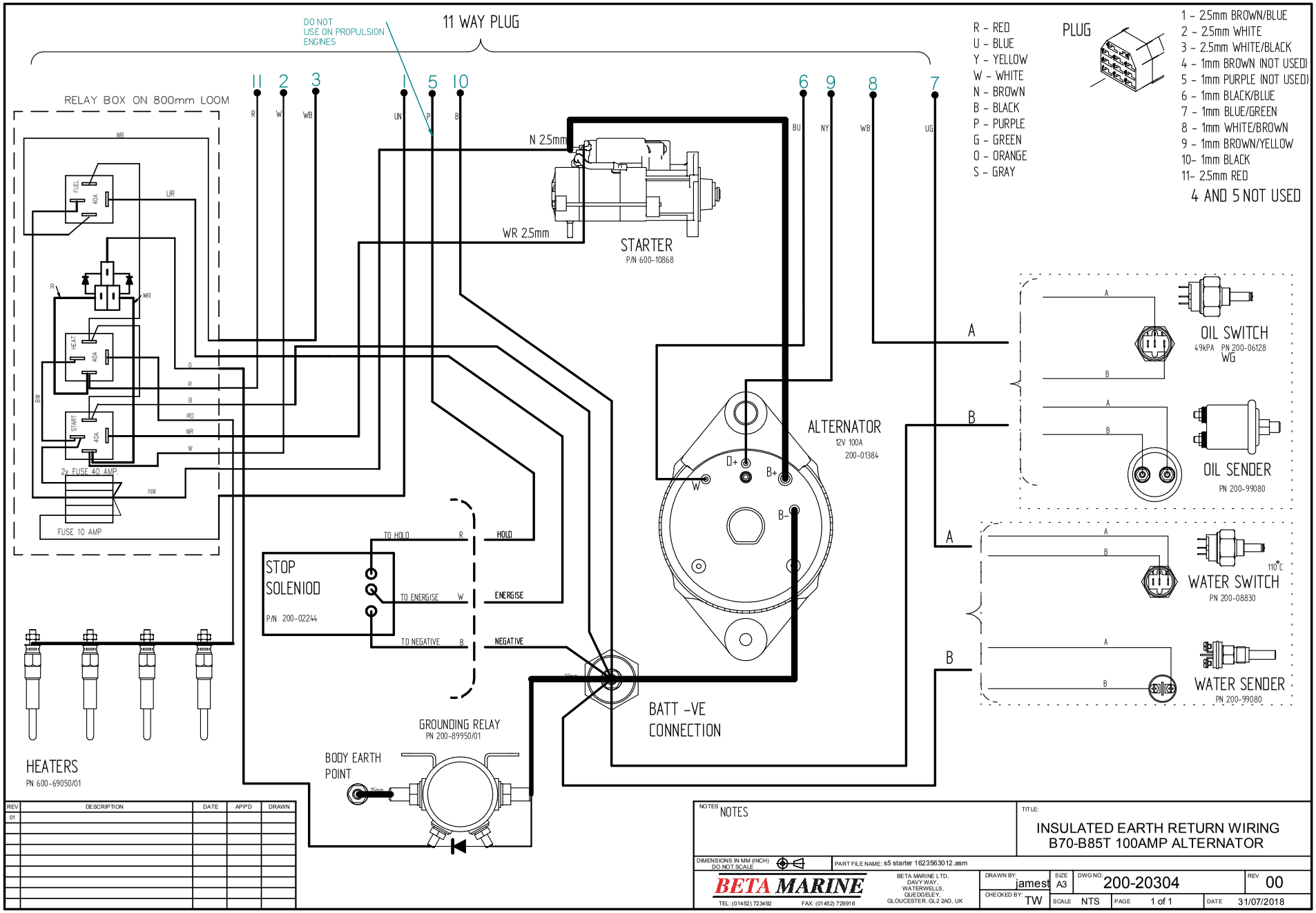
11 WAY PLUG
DO NOT USE ON PROPULSION ENGINES
11 2 3 1 5 10 6 9 8 7
R W WB UN P B BU NY WB UG
RELAY BOX ON 800mm LOOM
FUEL 40A
HEAT 40A
START 40A
2x FUSE 40 AMP
FUSE 10 AMP
N 2.5mm
WR 2.5mm
STARTER
P/N 600-10868
ALTERNATOR
12V 100A
200-01384
D+
B+
B-
W
STOP SOLENIOD
P/N 200-02244
TO HOLD
TO ENERGISE
TO NEGATIVE
HOLD
ENERGISE
NEGATIVE
GROUNDING RELAY
PN 200-89950/01
BODY EARTH POINT
BATT -VE CONNECTION
HEATERS
PN 600-69050/01
R - RED
U - BLUE
Y - YELLOW
W - WHITE
N - BROWN
B - BLACK
P - PURPLE
G - GREEN
O - ORANGE
S - GRAY
PLUG
1 - 2.5mm BROWN/BLUE
2 - 2.5mm WHITE
3 - 2.5mm WHITE/BLACK
4 - 1mm BROWN (NOT USED)
5 - 1mm PURPLE (NOT USED)
6 - 1mm BLACK/BLUE
7 - 1mm BLUE/GREEN
8 - 1mm WHITE/BROWN
9 - 1mm BROWN/YELLOW
10- 1mm BLACK
11- 2.5mm RED
4 AND 5 NOT USED
OIL SWITCH
49kPA PN 200-06128
WG
OIL SENDER
PN 200-99080
WATER SWITCH
110°C
PN 200-08830
WATER SENDER
PN 200-99080
A
B
NOTES
TITLE:
INSULATED EARTH RETURN WIRING
B70-B85T 100AMP ALTERNATOR
DIMENSIONS IN MM (INCH) DO NOT SCALE
PART FILE NAME: s5 starter 1623563012.asm
BETA MARINE
TEL: (01452) 723492
FAX: (01452) 729916
BETA MARINE LTD, DAVY WAY, WATERWELLS, QUEDGELEY, GLOUCESTER. GL2 2AD, UK
DRAWN BY: jamest
CHECKED BY: TW
SIZE A3
DWG NO. 200-20304
REV 00
SCALE NTS
PAGE 1 of 1
DATE 31/07/2018
REV
DESCRIPTION
DATE
APP'D
DRAWN
01

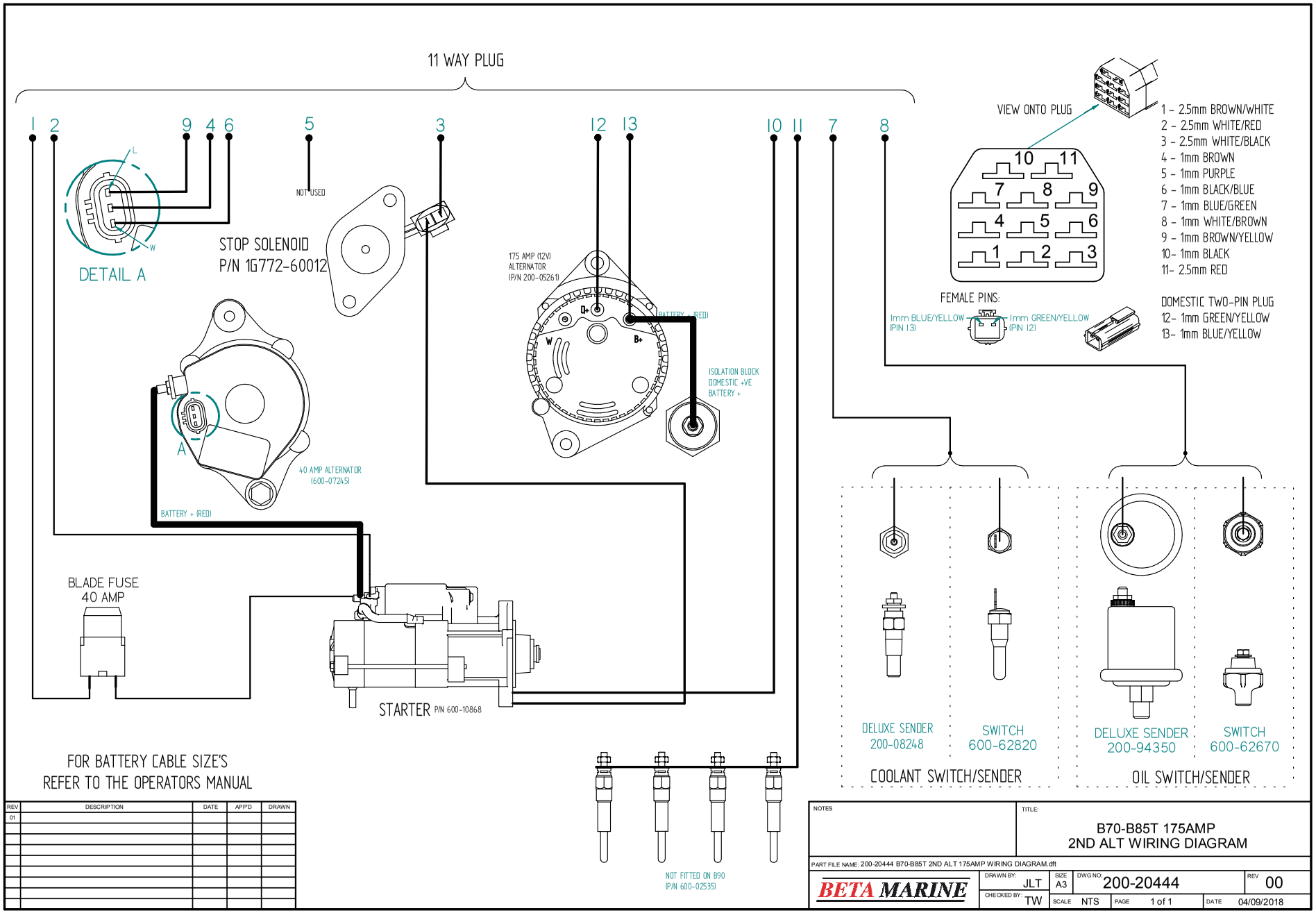

REV	DESCRIPTION	DATE	APP'D	DRAWN
01				

NOTES

TITLE: B70-B85T 175AMP 2ND ALT WIRING DIAGRAM

PART FILE NAME: 200-20444 B70-B85T 2ND ALT 175AMP WIRING DIAGRAM.dft

BETA MARINE

DRAWN BY: JLT	SIZE A3	DWG NO: 200-20444	REV 00
CHECKED BY: TW	SCALE NTS	PAGE 1 of 1	DATE 04/09/2018

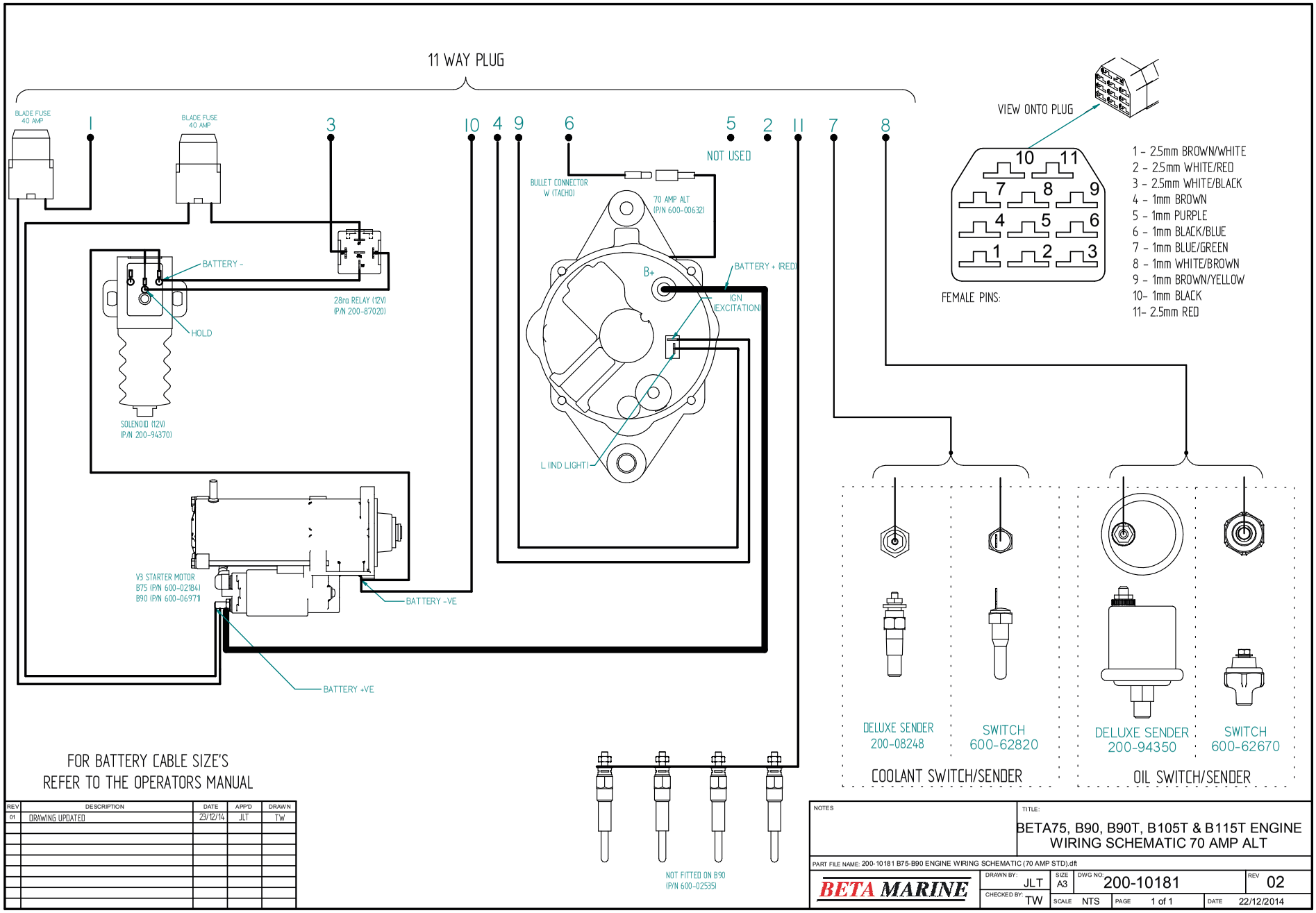

REV	DESCRIPTION	DATE	APP'D	DRAWN
01	DRAWING UPDATED	23/12/14	JLT	TW

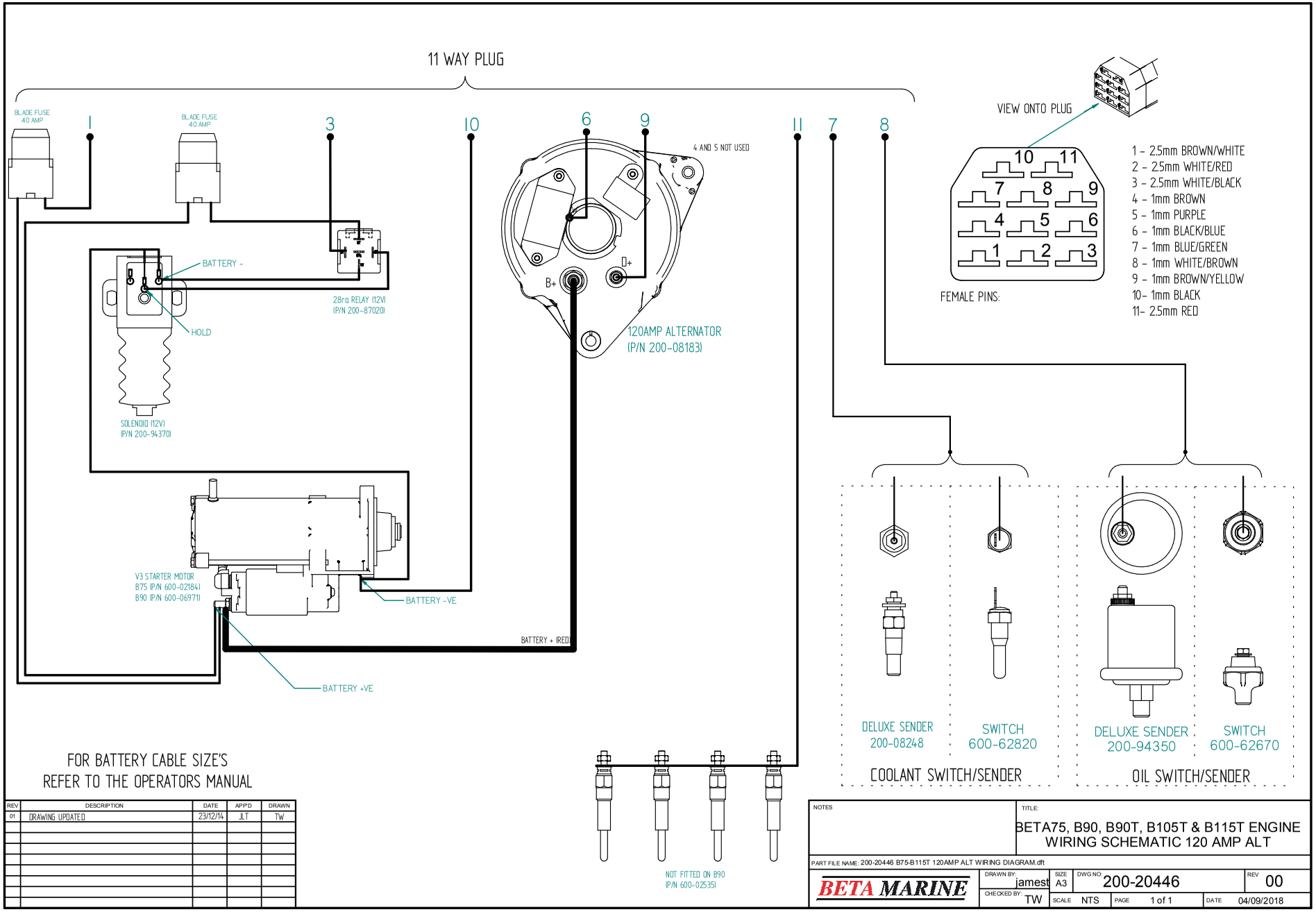
11 WAY PLUG
BLADE FUSE 40 AMP
BLADE FUSE 40 AMP
1
3
10
6
9
11
7
8
4 AND 5 NOT USED
D+
B+
120AMP ALTERNATOR (P/N 200-08183)
BATTERY -
HOLD
28ra RELAY (12V) (P/N 200-87020)
SOLENOID (12V) (P/N 200-94370)
V3 STARTER MOTOR
B75 (P/N 600-02184)
B90 (P/N 600-06971)
BATTERY -VE
BATTERY + (RED)
BATTERY +VE
VIEW ONTO PLUG
10 11
7 8 9
4 5 6
1 2 3
FEMALE PINS:
1 - 2.5mm BROWN/WHITE
2 - 2.5mm WHITE/RED
3 - 2.5mm WHITE/BLACK
4 - 1mm BROWN
5 - 1mm PURPLE
6 - 1mm BLACK/BLUE
7 - 1mm BLUE/GREEN
8 - 1mm WHITE/BROWN
9 - 1mm BROWN/YELLOW
10- 1mm BLACK
11- 2.5mm RED
DELUXE SENDER 200-08248
SWITCH 600-62820
COOLANT SWITCH/SENDER
DELUXE SENDER 200-94350
SWITCH 600-62670
OIL SWITCH/SENDER
NOT FITTED ON B90 (P/N 600-02535)
FOR BATTERY CABLE SIZE'S
REFER TO THE OPERATORS MANUAL
REV | DESCRIPTION | DATE | APP'D | DRAWN
01 | DRAWING UPDATED | 23/12/14 | JLT | TW
NOTES
TITLE:
BETA75, B90, B90T, B105T & B115T ENGINE
WIRING SCHEMATIC 120 AMP ALT
PART FILE NAME: 200-20446 B75-B115T 120AMP ALT WIRING DIAGRAM.dft
BETA MARINE
DRAWN BY: jamest
CHECKED BY: TW
SIZE A3
DWG NO: 200-20446
REV 00
SCALE NTS
PAGE 1 of 1
DATE 04/09/2018

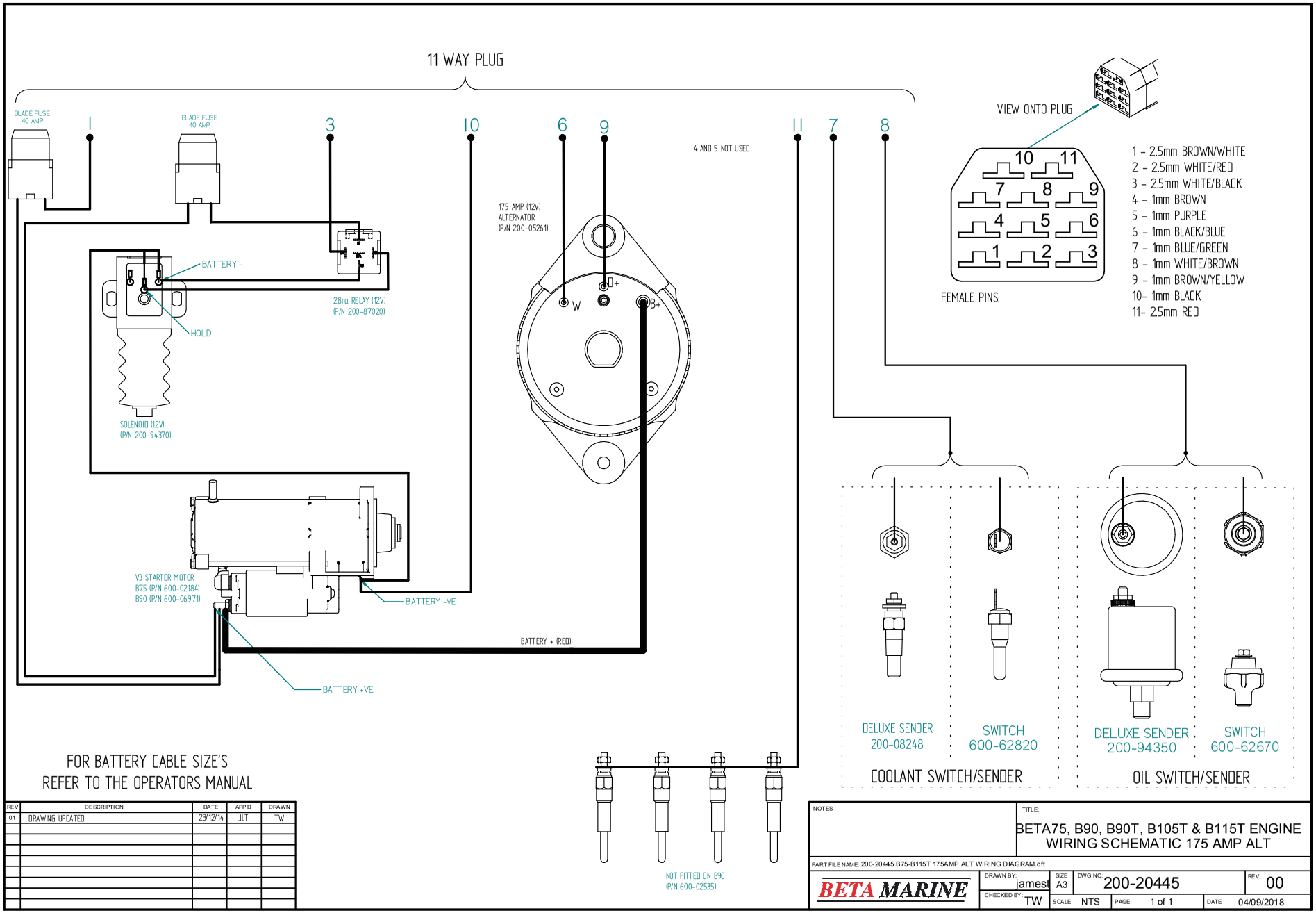

FOR BATTERY CABLE SIZE'S
REFER TO THE OPERATORS MANUAL

REV	DESCRIPTION	DATE	APP'D	DRAWN
01	DRAWING UPDATED	23/12/14	JLT	TW

NOTES

TITLE: BETA75, B90, B90T, B105T & B115T ENGINE WIRING SCHEMATIC 175 AMP ALT

PART FILE NAME: 200-20445 B75-B115T 175AMP ALT WIRING DIAGRAM.dft

BETA MARINE

DRAWN BY:	SIZE	DWG NO.	REV
jamest	A3	200-20445	00
CHECKED BY: TW	SCALE NTS	PAGE 1 of 1	DATE 04/09/2018

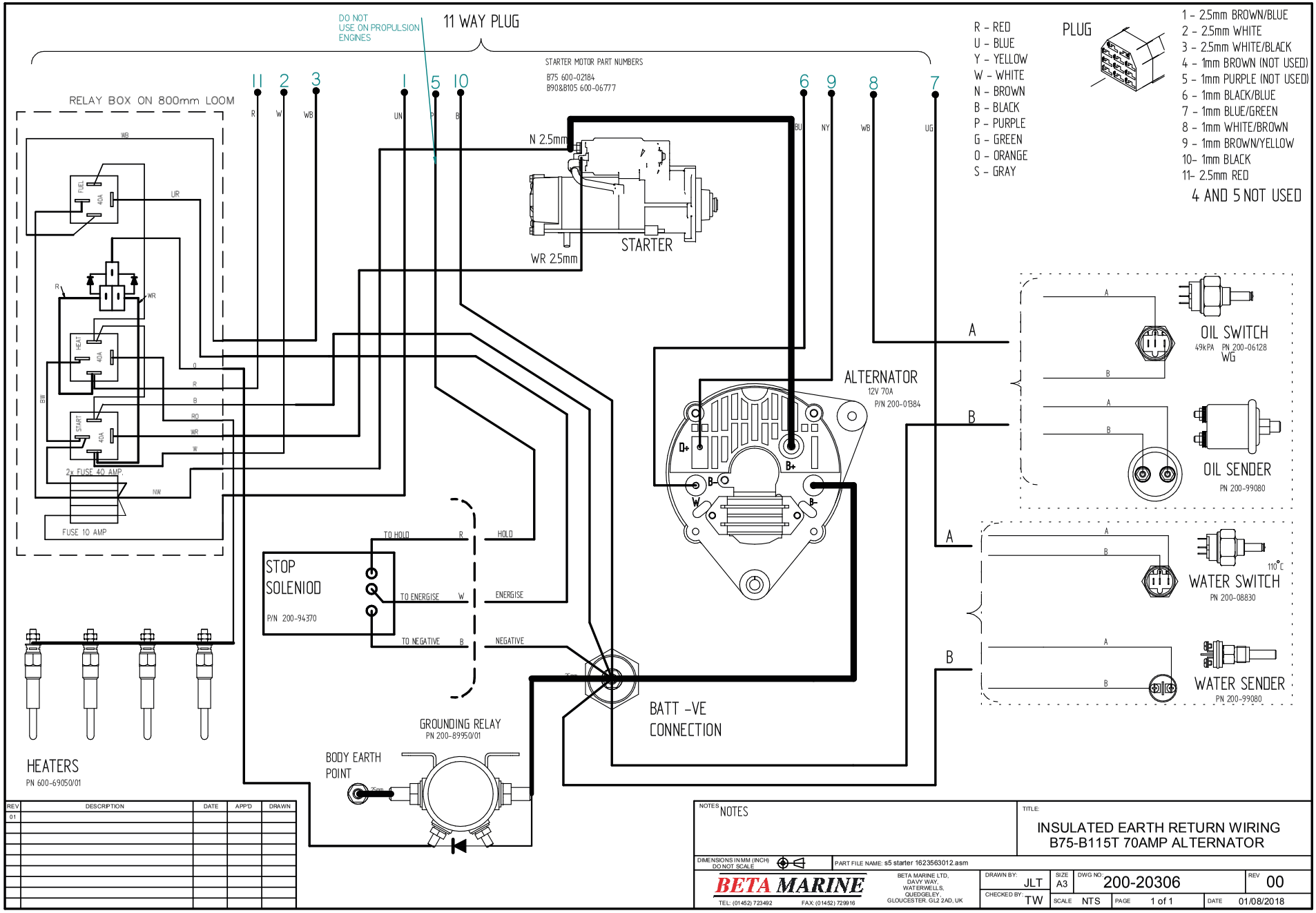
11 WAY PLUG
DO NOT USE ON PROPULSION ENGINES
STARTER MOTOR PART NUMBERS
B75 600-02184
B90&B105 600-06777
RELAY BOX ON 800mm LOOM
FUEL 40A
HEAT 40A
START 40A
2x FUSE 40 AMP
FUSE 10 AMP
N 2.5mm
WR 2.5mm
STARTER
ALTERNATOR
12V 70A
P/N 200-01384
D+
B+
B-
W
STOP SOLENIOD
P/N 200-94370
TO HOLD
TO ENERGISE
TO NEGATIVE
HOLD
ENERGISE
NEGATIVE
GROUNDING RELAY
PN 200-89950/01
BODY EARTH POINT
BATT -VE CONNECTION
HEATERS
PN 600-69050/01
R - RED
U - BLUE
Y - YELLOW
W - WHITE
N - BROWN
B - BLACK
P - PURPLE
G - GREEN
O - ORANGE
S - GRAY
PLUG
1 - 2.5mm BROWN/BLUE
2 - 2.5mm WHITE
3 - 2.5mm WHITE/BLACK
4 - 1mm BROWN (NOT USED)
5 - 1mm PURPLE (NOT USED)
6 - 1mm BLACK/BLUE
7 - 1mm BLUE/GREEN
8 - 1mm WHITE/BROWN
9 - 1mm BROWN/YELLOW
10- 1mm BLACK
11- 2.5mm RED
4 AND 5 NOT USED
OIL SWITCH
49kPA PN 200-06128
WG
OIL SENDER
PN 200-99080
WATER SWITCH
110°C
PN 200-08830
WATER SENDER
PN 200-99080
NOTES
TITLE:
INSULATED EARTH RETURN WIRING
B75-B115T 70AMP ALTERNATOR
DIMENSIONS IN MM (INCH) DO NOT SCALE
PART FILE NAME: s5 starter 1623563012.asm
BETA MARINE
BETA MARINE LTD, DAVY WAY, WATERWELLS, QUEDGELEY, GLOUCESTER, GL2 2AD, UK
TEL: (01452) 723492
FAX: (01452) 729916
DRAWN BY: JLT
CHECKED BY: TW
SIZE A3
DWG NO. 200-20306
REV 00
SCALE NTS
PAGE 1 of 1
DATE 01/08/2018
REV
DESCRIPTION
DATE
APP'D
DRAWN
01

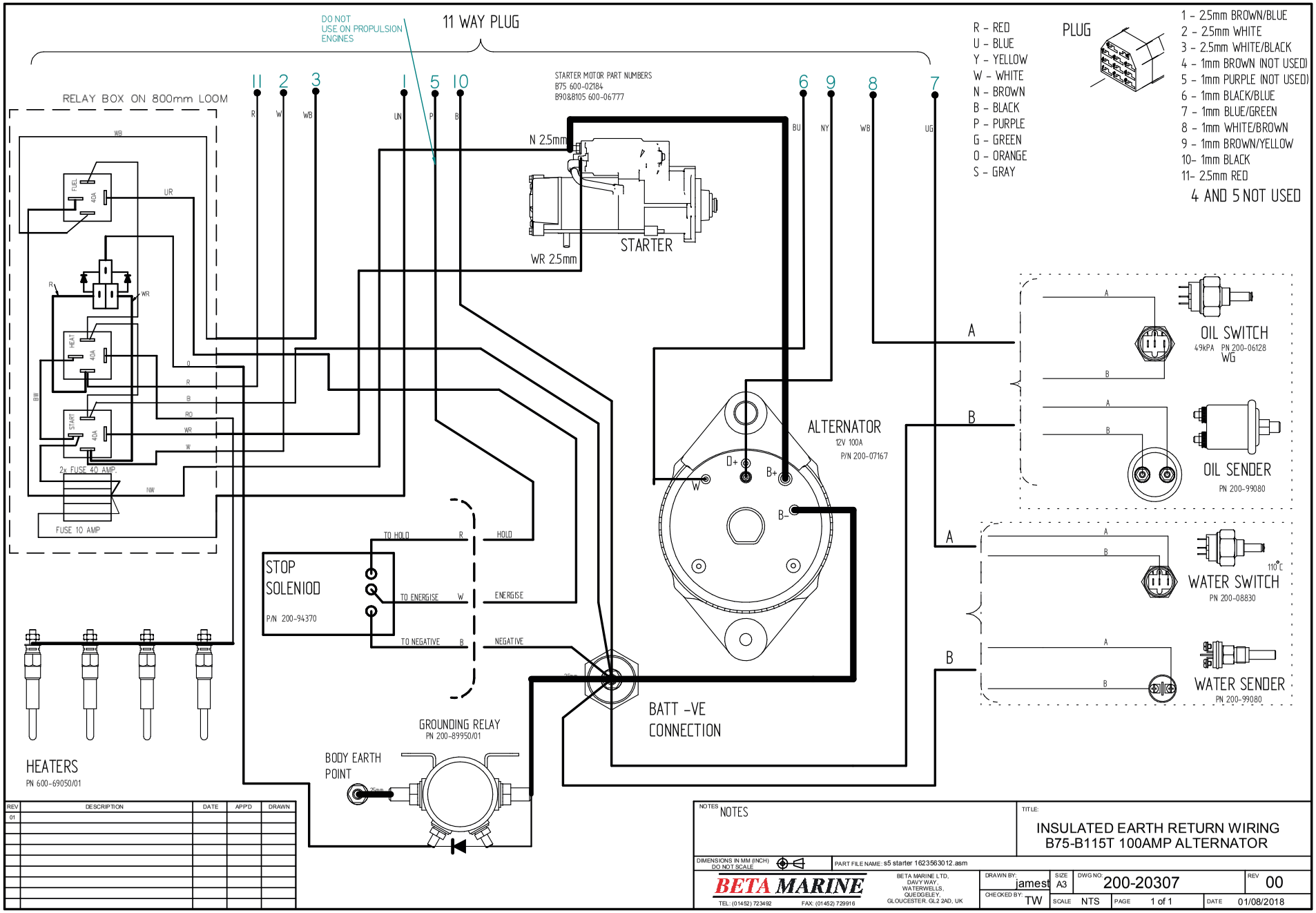
11 WAY PLUG
DO NOT USE ON PROPULSION ENGINES
RELAY BOX ON 800mm LOOM
FUEL 40A
HEAT 40A
START 40A
2x FUSE 40 AMP
FUSE 10 AMP
STARTER MOTOR PART NUMBERS
B75 600-02184
B90&B105 600-06777
N 2.5mm
WR 2.5mm
STARTER
ALTERNATOR
12V 100A
P/N 200-07167
D+
B+
B-
W
STOP SOLENIOD
P/N 200-94370
TO HOLD
TO ENERGISE
TO NEGATIVE
HOLD
ENERGISE
NEGATIVE
GROUNDING RELAY
PN 200-89950/01
BODY EARTH POINT
BATT -VE CONNECTION
HEATERS
PN 600-69050/01
R - RED
U - BLUE
Y - YELLOW
W - WHITE
N - BROWN
B - BLACK
P - PURPLE
G - GREEN
O - ORANGE
S - GRAY
PLUG
1 - 2.5mm BROWN/BLUE
2 - 2.5mm WHITE
3 - 2.5mm WHITE/BLACK
4 - 1mm BROWN (NOT USED)
5 - 1mm PURPLE (NOT USED)
6 - 1mm BLACK/BLUE
7 - 1mm BLUE/GREEN
8 - 1mm WHITE/BROWN
9 - 1mm BROWN/YELLOW
10- 1mm BLACK
11- 2.5mm RED
4 AND 5 NOT USED
OIL SWITCH
49kPA PN 200-06128
WG
OIL SENDER
PN 200-99080
WATER SWITCH
110°C
PN 200-08830
WATER SENDER
PN 200-99080
NOTES
TITLE:
INSULATED EARTH RETURN WIRING
B75-B115T 100AMP ALTERNATOR
DIMENSIONS IN MM (INCH) DO NOT SCALE
PART FILE NAME: s5 starter 1623563012.asm
BETA MARINE
TEL: (01452) 723492
FAX: (01452) 729916
BETA MARINE LTD, DAVY WAY, WATERWELLS, QUEDGELEY, GLOUCESTER. GL2 2AD, UK
DRAWN BY: jamest
CHECKED BY: TW
SIZE A3
DWG NO. 200-20307
REV 00
SCALE NTS
PAGE 1 of 1
DATE 01/08/2018
REV
DESCRIPTION
DATE
APP'D
DRAWN
01

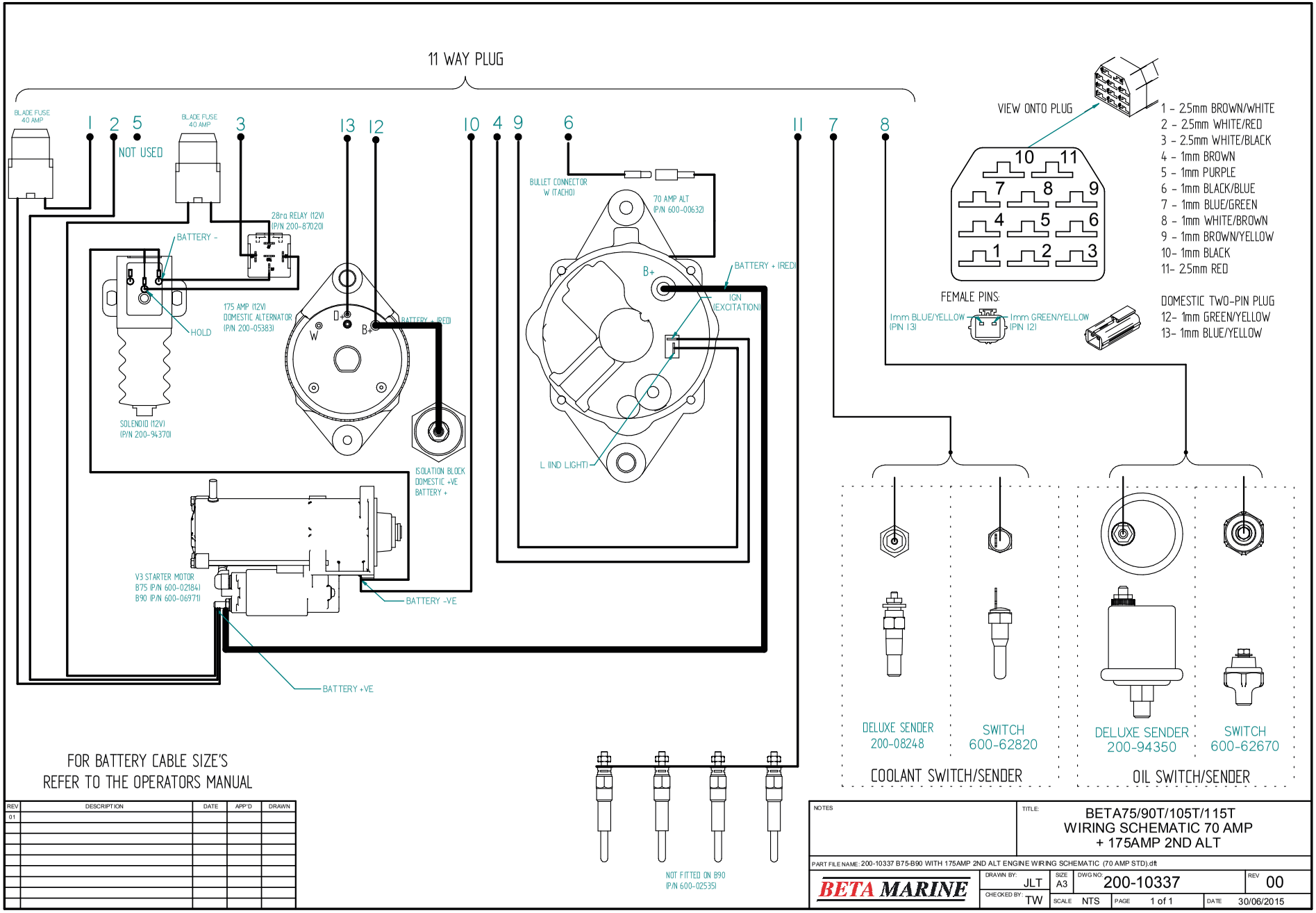

REV	DESCRIPTION	DATE	APP'D	DRAWN
01				

VIEW LOOKING ON CONNECTOR FACE
FITTED WITH FEMALE SPADE/BULLET

1 - 2.5mm BROWN/WHITE TRACER
2 - 2.5mm WHITE/RED TRACER
3 - 2.5mm WHITE/BLACK TRACER
4 - 1mm BROWN
5 - 1mm PURPLE
6 - 1mm BLACK/BLUE TRACER
7 - 1mm BLUE/GREEN TRACER
8 - 1mm WHITE/BROWN TRACER
9 - 1mm BROWN/YELLOW TRACER
10 - 1mm BLACK
11 - 2.5mm RED
12 - 1mm GREEN/YELLOW TRACER
13 - 1mm BLUE/YELLOW TRACER
14 - 1mm YELLOW

VIEW LOOKING ON CONNECTOR FACE
FITTED WITH MALE SPADE/BULLET

1 - 2.5mm BROWN/WHITE TRACER
2 - 2.5mm WHITE/RED TRACER
3 - 2.5mm WHITE/BLACK TRACER
4 - 1mm BROWN
5 - 1mm PURPLE
6 - 1mm BLACK/BLUE TRACER
7 - 1mm BLUE/GREEN TRACER
8 - 1mm WHITE/BROWN TRACER
9 - 1mm BROWN/YELLOW TRACER
10 - 1mm BLACK
11 - 2.5mm RED
12 - 1mm GREEN/YELLOW TRACER
13 - 1mm BLUE/YELLOW TRACER
14 - 1mm YELLOW

1 METER - P/N 200-04588/01
2 METER - P/N 200-04588/02
3 METER - P/N 200-04588/03
4 METER - P/N 200-04588/04
5 METER - P/N 200-04588/05

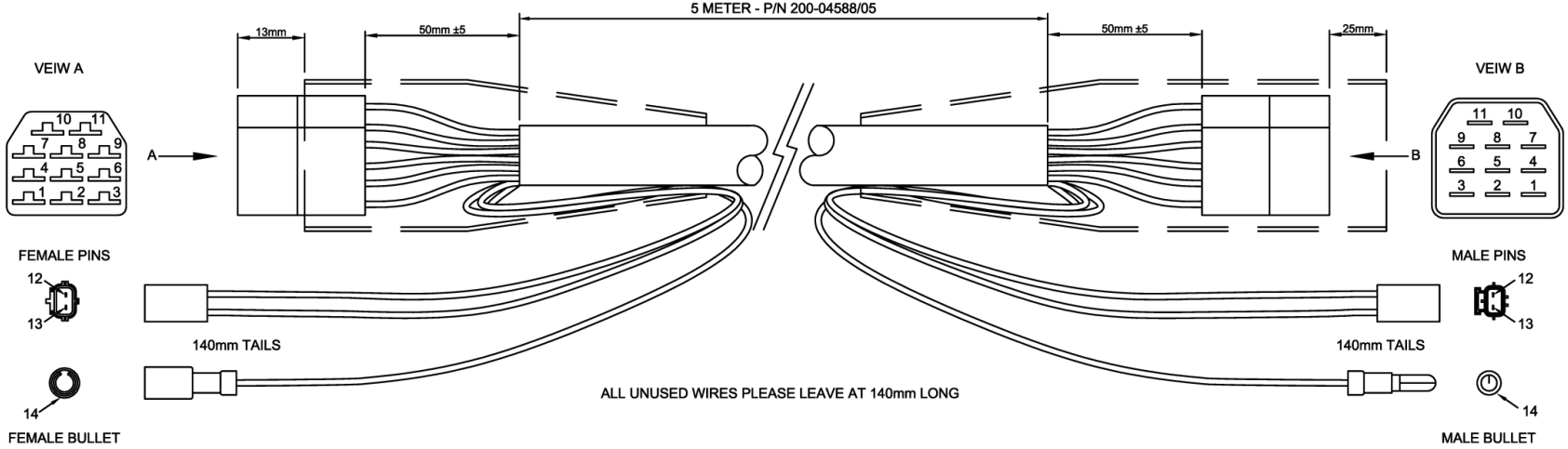

REV	DESCRIPTION	DATE	APP'D	DRAWN
01				

NOTES

DIMENSIONS IN MM (INCH)
DO NOT SCALE

TITLE: EXTENSION HARNESS

BETA MARINE
TEL +44 (0)1452 723492 FAX +44 (0)1452 883742

BETA MARINE LTD.
DAVY WAY, WATERWELLS,
QUEDGELEY, GLOUCESTER
GL2 2AD UK

DRAWN BY:– TW	SIZE A4	DWG NO. 200-04588	REV 00
CHECKED BY:– LT	SCALE NTS	PAGE 1 of 1	DATE 15/10/04

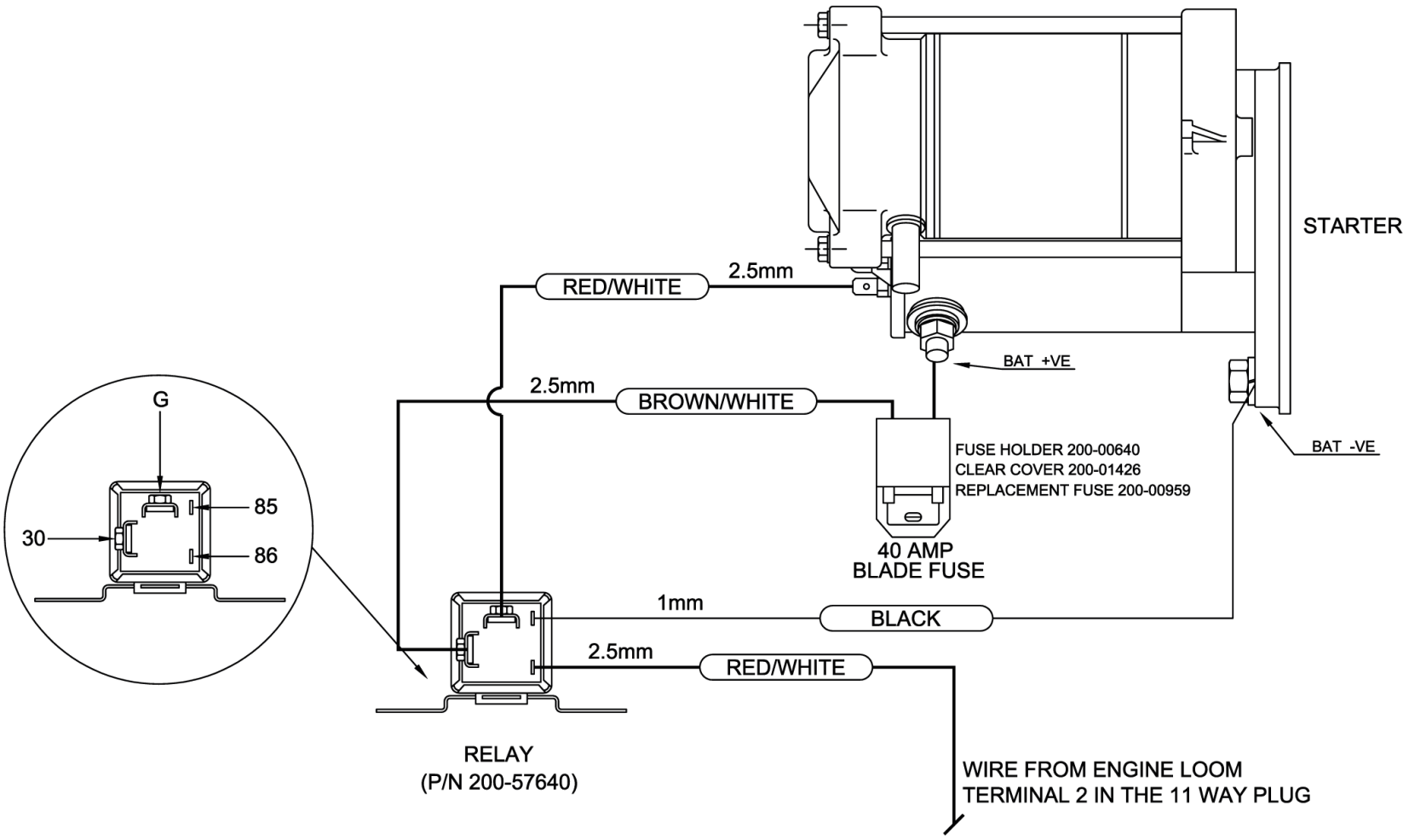

REV	DESCRIPTION	DATE	APP'D	DRAWN
01	wiring change	19/01/09	DM	TW

NOTES

DIMENSIONS IN MM (INCH)
DO NOT SCALE

TITLE

STARTER RELAY
FOR EXTENDED HARNESS
OVER 4m TOTAL LENGTH

BETA MARINE

TEL +44 (0)1452 723492 FAX +44 (0)1452 883742

BETA MARINE LTD.
DAVY WAY, WATERWELLS,
QUEDGELEY, GLOUCESTER
GL2 2AD UK

DRAWN BY:–	SIZE	DWG NO.	REV
TW	A4	300-58520	01
CHECKED BY:– DM	SCALE N/A	PAGE 1 of 1	DATE 16/10/02

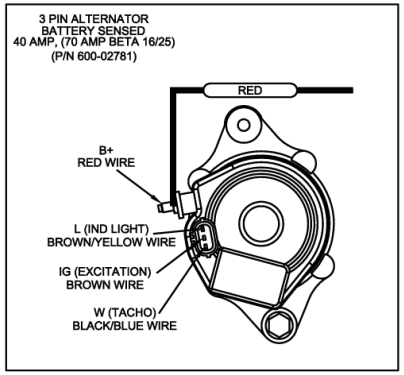

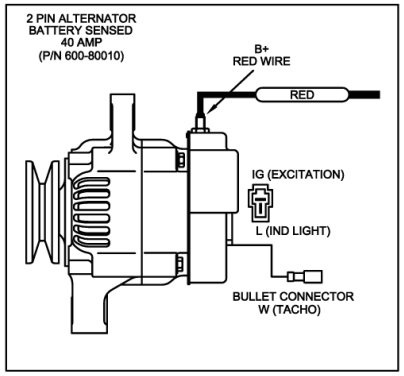

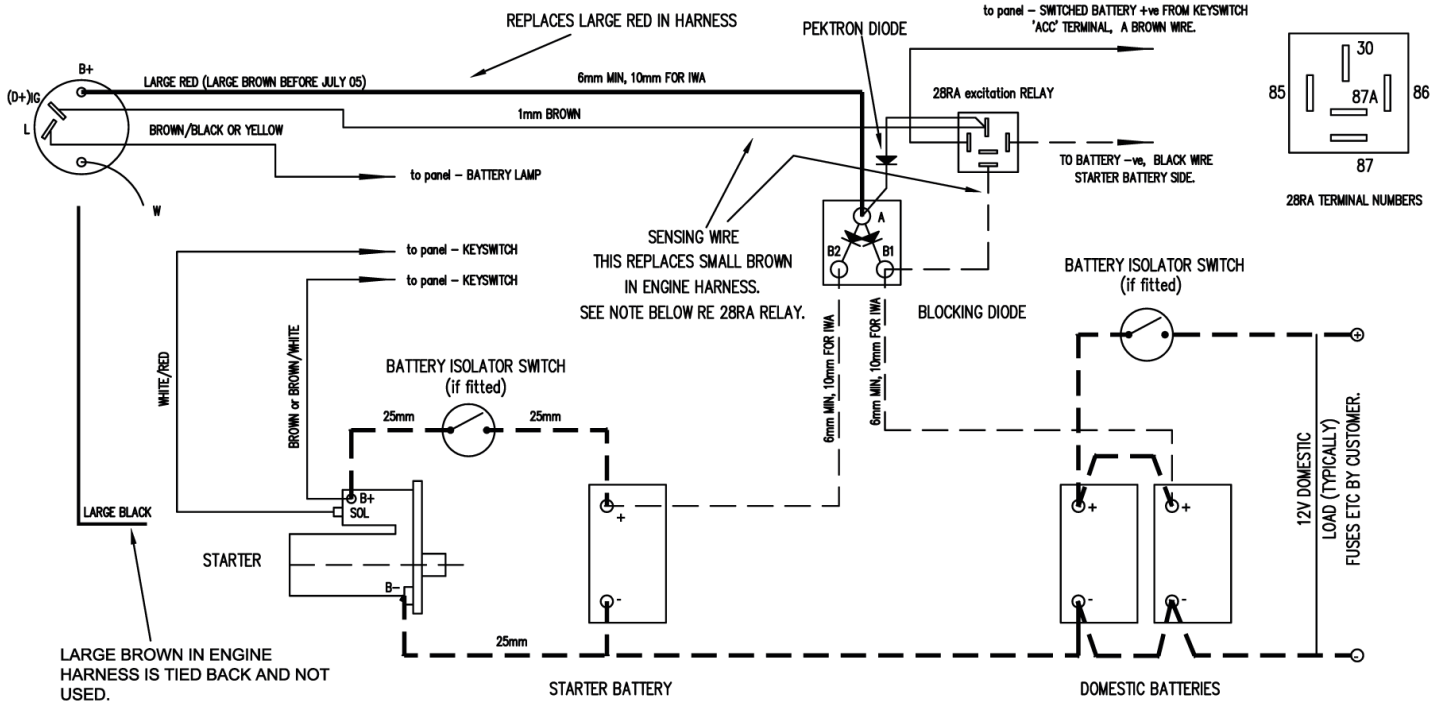

NOTES_

IF BATTERY ISOLATOR(S) ARE FITTED THEY MUST BE CLOSED WHEN ENGINE IS STARTED AND RUNNING. THEY MUST NOT BE OPERATED WHEN THE ENGINE IS RUNNING AS THIS WILL DAMAGE THE ALTERNATOR.

BATTERY LEADS MUST BE INCREASED IN CSA FOR RUNS OVER 2M. CONSULT BETA. CABLES SHOWN BY DASHED LINES ARE CUSTOMER SUPPLY. RECOMMENDED MINIMUM CSA'S SHOWN.

BLOCKING DIODE MUST BE SIZED TO COPE WITH THE FULL ALTERNATOR OUTPUT.

WE RECOMMEND THE USE OF MULTISTRANDED
CABLE TO BS 6862 PT 1. - 25mm - 196/0.4(EPR/CSP)
6mm - 84/0.3
1mm - 14/0.3
BETA SPLIT CHARGE RELAY PT NO - 200-57640
BETA BATT. ISOLATOR SWITCH PT NO - 200-62200
REFER ALSO TO SPECIFIC ENGINE WIRING DIAGRAM(S)
ALSO BETA MARINE NOTES "DUAL BATTERY CHARGING SYSTEMS".
BATTERY LEADS, SWITCHES AND RELAYS ARE OPTIONAL EXTRAS AND ARE ONLY SUPPLIED WHEN SPECIFICALLY ORDERED.

NOTE RE 28RA RELAY. THIS RELAY IS TO BE INSTALLED IF DOMESTIC BATTERIES ARE TO BE SENSED. IT CAN BE OMITTED AND THE ORIGINAL SMALL BROWN RETAINED TO THE PANEL, IN WHICH CASE THE ALTERNATOR WILL SENSE THE STARTER BATTERY.

REV	DESCRIPTION	DATE	APP'D
02	REDRAWN ON CAD	15.10.2001	PAG
03	SHOWN BATTERY CABLE IN DASHED	15.02.05	TW
04	ADDED MISSING – BATTERY CONECTION	01.12.05	TW
05	CHANGED ALT & SHOWN 3 PIN ALT	15.12.05	TW
06	TEXT ON LARGE BROWN	21.08.07	TW
07	BETA 16 AND 25 ALT	10.11.08	TW

NOTES

FOR SPLIT CHARGE RELAY SYSTEM REFER TO DRAWING 300-62210. DRAWING 200-02189 MAY ALSO BE OF ASSISTANCE.

(ISSUE 02+ OF THIS DRAWING ALSO REPLACES 300-97720).

BETA MARINE
TEL +44 (0)1452 723492 FAX +44 (0)1452 883742

DRAWN BY:– PAG

CHECKED BY:–

COMPLETE UNIT TYPICAL INSALLATION FOR SPLIT CHARGE DUAL BATTERY SYSTEM, BATTERY SENSED ALTERNATORS.

TITLE BLOCKING DIODE SPLIT CHARGE INSTALLATION.

DWG NO. 300-62220 REV 05

DATE OCTOBER 1997 SHEET 1 OF 1

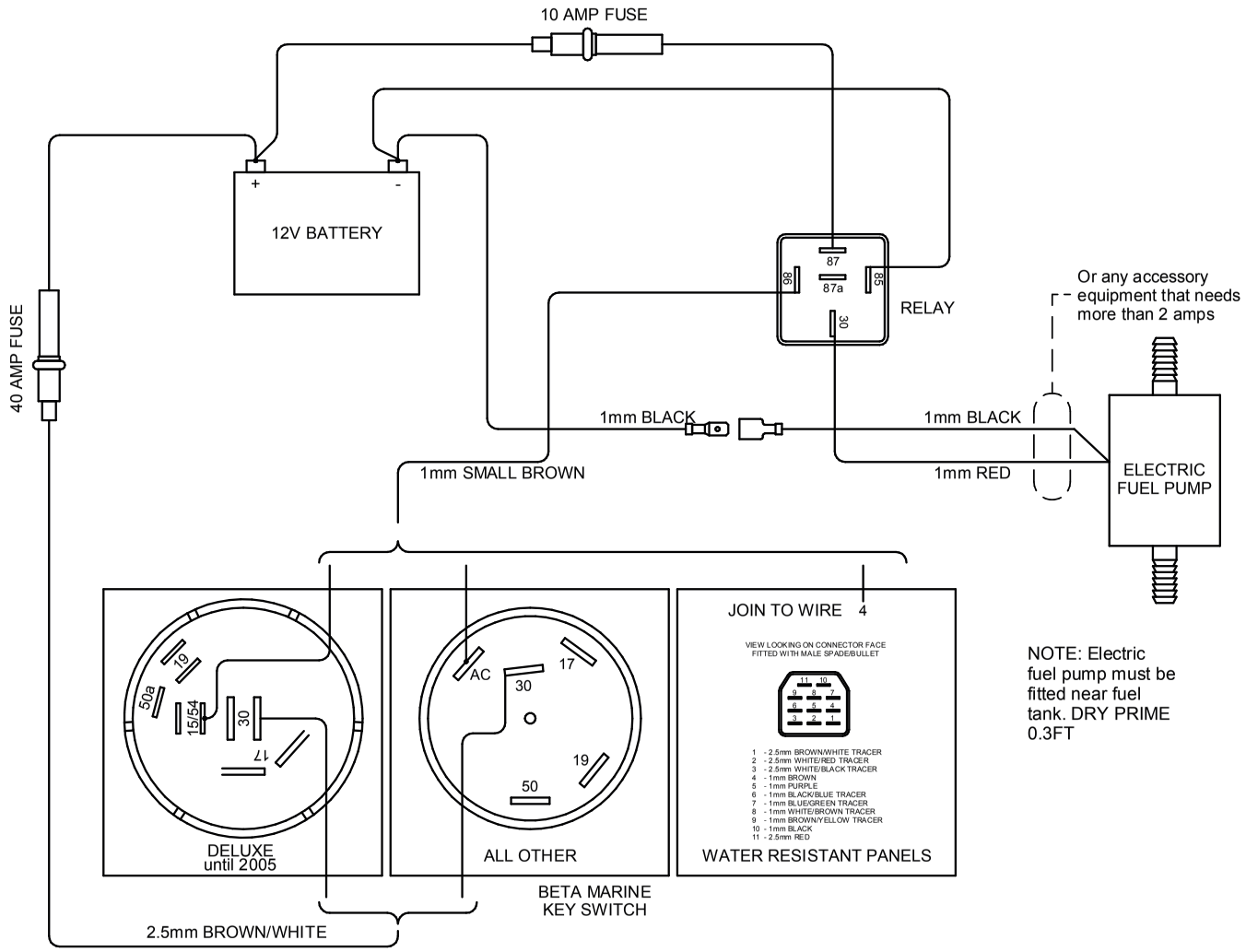

NOTE: Electric fuel pump must be fitted near fuel tank. DRY PRIME 0.3FT

REV	DESCRIPTION	DATE	APP'D	DRAWN
01				
02	NOTE ADDAD	19/7/12	LT	TW
03	ACCESSORY NOTE ADDED	15/09/15	LT	TW

NOTES

TITLE: ACCESSORY AND ELECTRIC FUEL LIFT PUMP WIRING DRAWING

DIMENSIONS IN MM (INCH) DO NOT SCALE

PART FILE NAME: Error: No reference

BETA MARINE

TEL: (01452) 723492 FAX: (01452) 729916

BETA MARINE LTD, DAVY WAY, WATERWELLS, QUEDGELEY, GLOUCESTER. GL2 2AD, UK

DRAWN BY: TW

CHECKED BY: LT

SIZE A4

DWG NO: 200-06421

REV 03

SCALE NTS

PAGE 1 of 1

DATE 15/09/2015

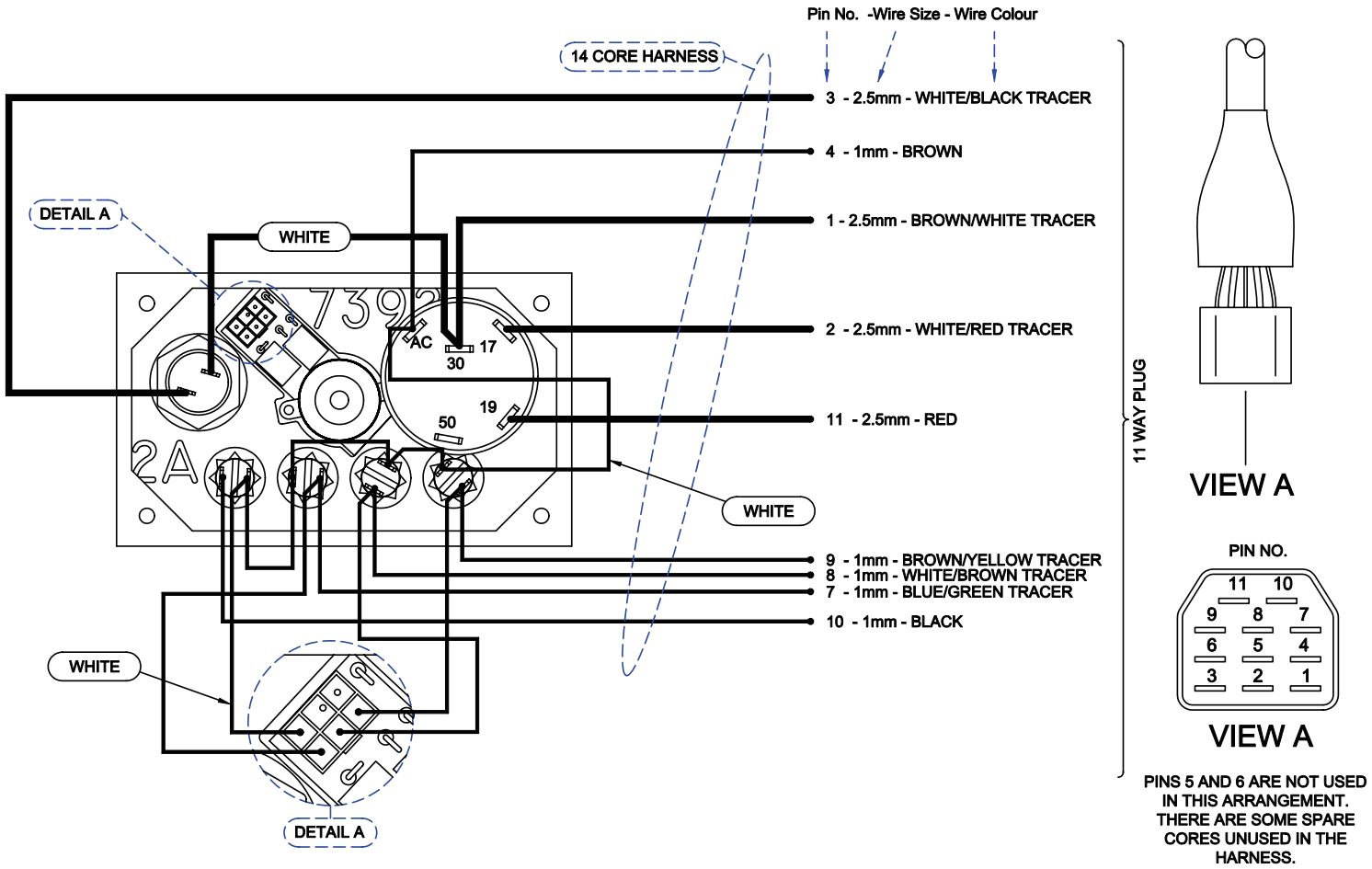

PINS 5 AND 6 ARE NOT USED IN THIS ARRANGEMENT. THERE ARE SOME SPARE CORES UNUSED IN THE HARNESS.

REV	DESCRIPTION	DATE	APP'D	DRAWN
.				

NOTES

FOR PART LIST AND PANEL SIZE SEE DRAWING 200-06305
PANEL PART NUMBER 200-00852

DIMENSIONS IN MM (INCH) DO NOT SCALE

TITLE

WIRING SCHEMATIC FOR A PANEL (SIMPLE) AFTER MAY 2005

BETA MARINE

BETA MARINE LTD.
DAVY WAY, WATERWELLS,
QUEDGELEY, GLOUCESTER
GL2 2AD UK
TEL +44 (0)1452 723492 FAX +44 (0)1452 883742

DRAWN BY:–	SIZE	DWG NO.	REV
TW	A4	200-06516	
CHECKED BY:– DM	SCALE N/A	PAGE 1 of 1	DATE 15/05/05

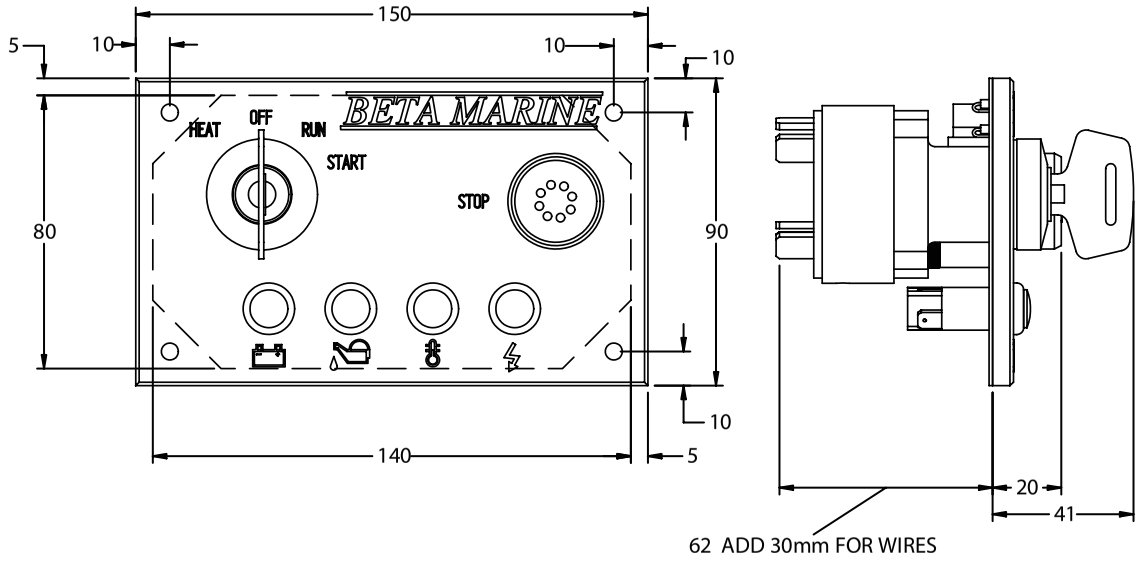

REV	DESCRIPTION	DATE	APP'D	DRAWN
01	CHANGED KEY SWITCH	05/09/08	LT	TW

NOTES

DIMENSIONS IN MM (INCH) DO NOT SCALE

MATL:

TITLE A PANEL

BETA MARINE

TEL +44 (0)1452 723492 FAX +44 (0)1452 883742

BETA MARINE LTD.
DAVY WAY, WATERWELLS,
QUEDGELEY, GLOUCESTER
GL2 2AD UK

DRAWN BY:-	TW	SIZE	A4	DWG NO.	200-06305	REV	01
CHECKED BY:-	LT	SCALE	NTS	PAGE	2 of 2	DATE	05/09/2008

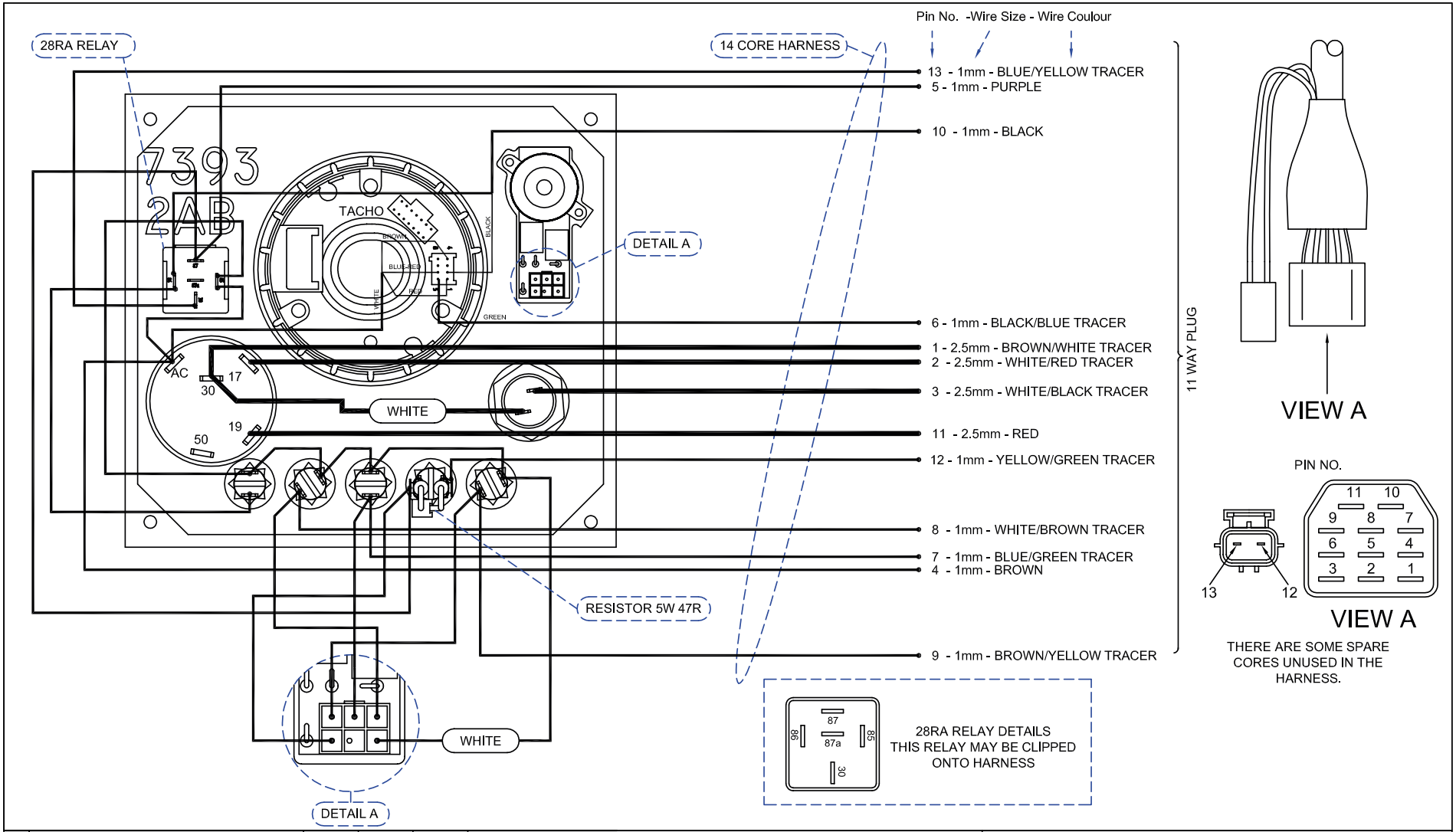

REV	DESCRIPTION	DATE	APP'D	DRAWN
0.1	TACHO AND DOMESTIC WIRING	22/04/11	DM	TW

NOTES

FOR PART LIST AND PANEL SIZE SEE DRAWING 200-06304
PANEL PART NUMBER 200-00850
(THIS EXCLUDES TACHO)

DIMENSIONS IN MM (INCH)
DO NOT SCALE

TITLE

WIRING SCHEMATIC FOR
AB PANEL
AFTER MAY 2011

BETA MARINE

BETA MARINE LTD.
DAVY WAY, WATERWELLS,
QUEDGELEY, GLOUCESTER
GL2 2AD UK
TEL +44 (0)1452 723492 FAX +44 (0)1452 883742

DRAWN BY:–	TW	SIZE	A4	DWG NO.	200-06517	REV	01
CHECKED BY:–	DM	SCALE	N/A	PAGE	1 of 1	DATE	22/04/11

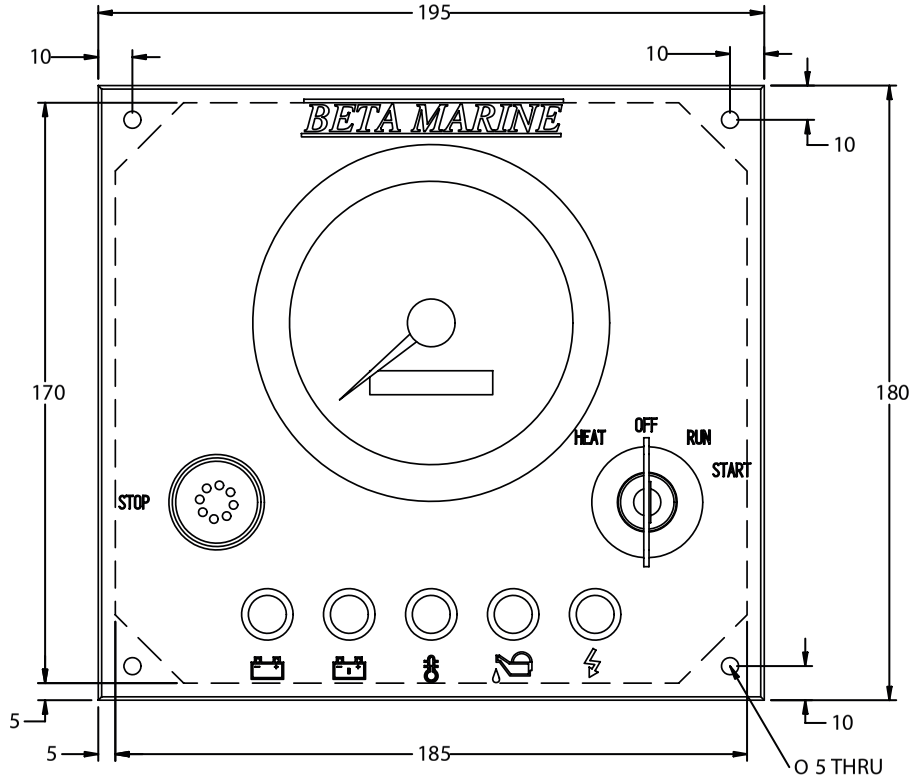

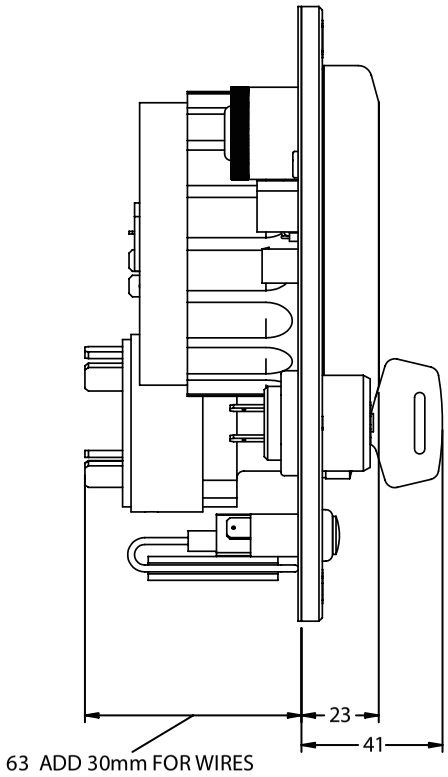

REV	DESCRIPTION	DATE	APP'D	DRAWN
01	CHANGED KEY SWITCH	05/09/08	LT	TW

NOTES

TITLE: AB PANEL

DIMENSIONS IN MM (INCH) DO NOT SCALE

MATL:

BETA MARINE

TEL +44 (0)1452 723492 FAX +44 (0)1452 883742

BETA MARINE LTD.
DAVY WAY, WATERWELLS,
QUEDGELEY, GLOUCESTER
GL2 2AD UK

DRAWN BY:-	TW	SIZE	A4	DWG NO.	200-06304	REV	01
CHECKED BY:-	LT	SCALE	NTS	PAGE	2 of 2	DATE	05/10/2007

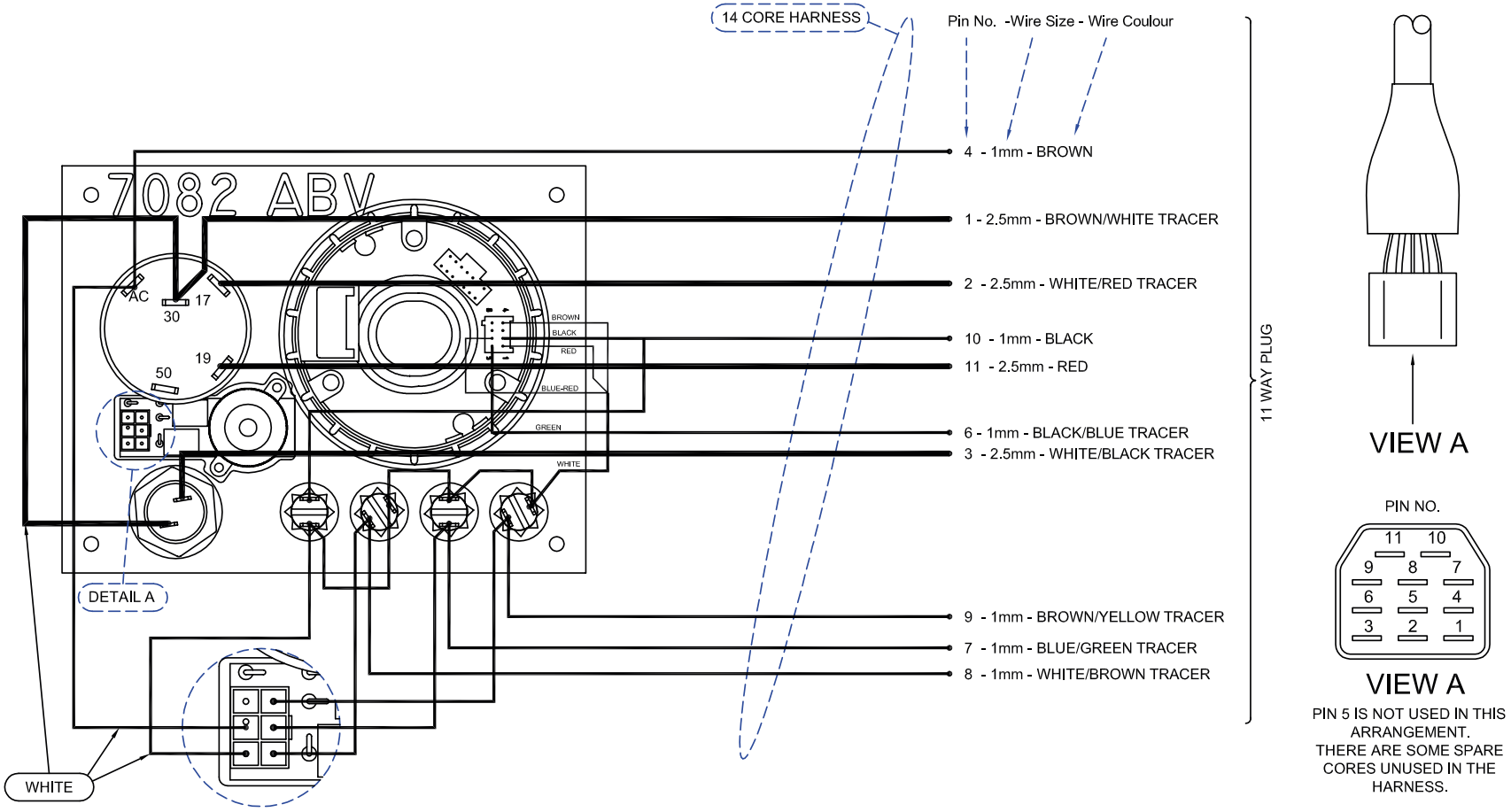

REV	DESCRIPTION	DATE	APP'D	DRAWN
01	TACHO	22/04/11	DM	LTJ#

NOTES

FOR PART LIST AND PANEL SIZE SEE DRAWING 200-06320
PANEL PART NUMBER 200-89421
THIS EXCLUDES TACHO

DIMENSIONS IN MM (INCH)
DO NOT SCALE

TITLE

WIRING SCHEMATIC FOR
ABV PANEL
AFTER MAY 2011

BETA MARINE
BETA MARINE LTD.
DAVY WAY, WATERWELLS,
QUEDGELEY, GLOUCESTER
GL2 2AD UK
TEL +44 (0)1452 723492 FAX +44 (0)1452 883742

DRAWN BY:–	SIZE	DWG NO.	REV
TW	A4	200-06519	01
CHECKED BY:– DM	SCALE N/A	PAGE 1 of 1	DATE 22/04/11

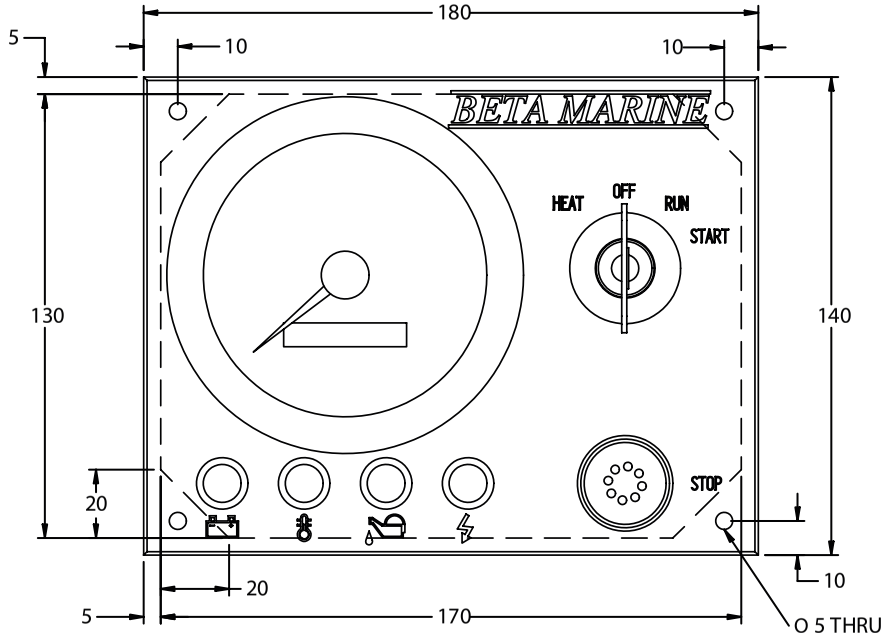

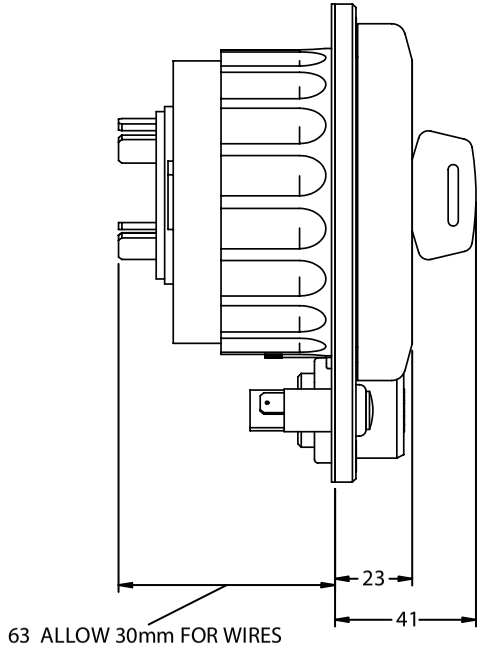

REV	DESCRIPTION	DATE	APP'D	DRAWN
01	CHANGED KEY SWITCH	05/09/08	LT	TW

NOTES

DIMENSIONS IN MM (INCH) DO NOT SCALE

MATL:

TITLE: ABV PANEL

BETA MARINE

TEL +44 (0)1452 723492 FAX +44 (0)1452 883742

BETA MARINE LTD.
DAVY WAY, WATERWELLS,
QUEDGELEY, GLOUCESTER
GL2 2AD UK

DRAWN BY:- timw
CHECKED BY:- LT

SIZE A4 | DWG NO. 200-06320/01 | REV 00

SCALE NTS | PAGE 2 of 2 | DATE 05/10/2007

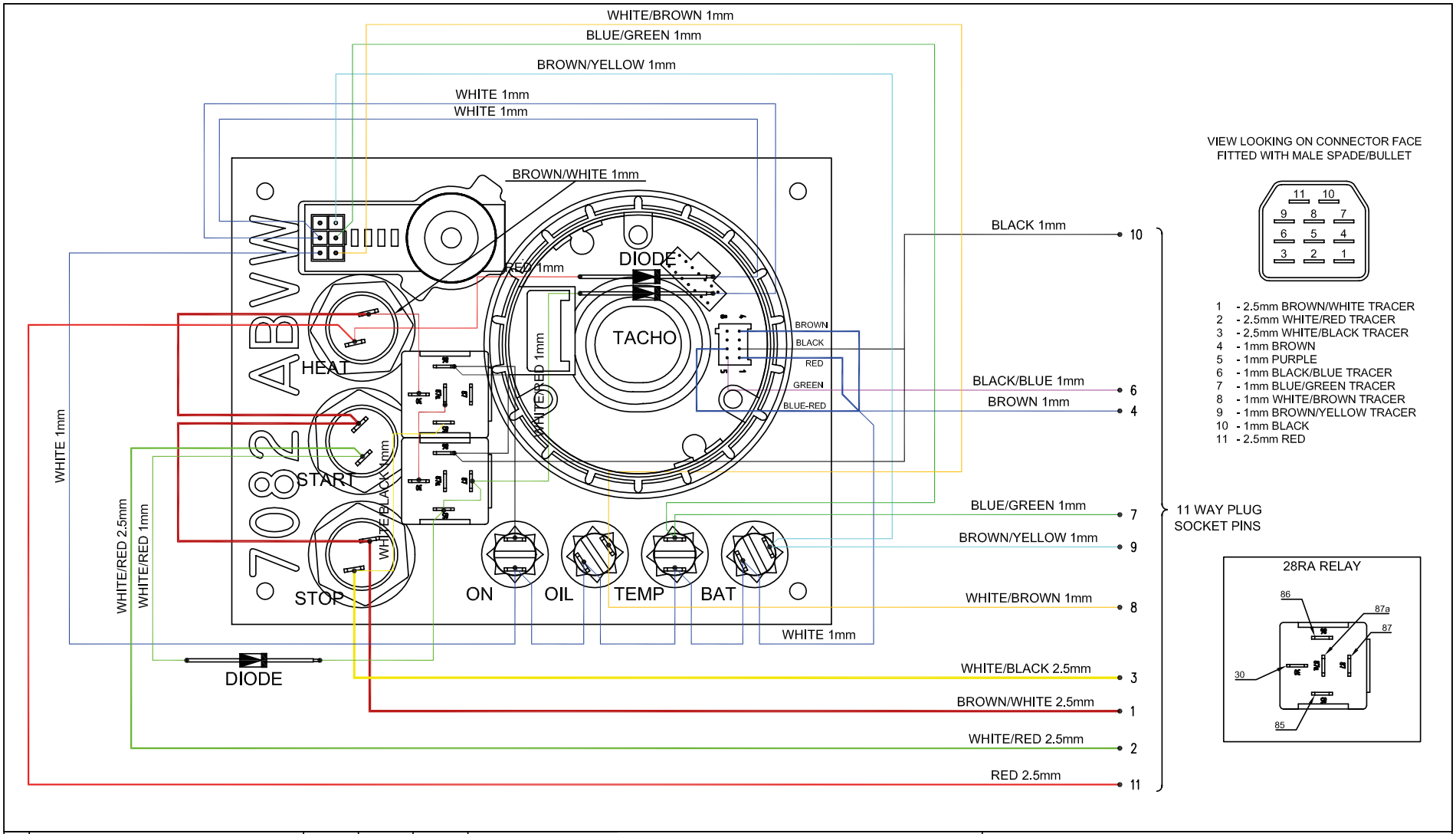

REV	DESCRIPTION	DATE	APP'D	DRAWN
01	WIRE COLOURS	15/10/04	DM	TW
02	MOVED BROWN/YELLOW WIRE	20/01/06	DM	TW
03	TACHO	22/04/11	DM	TW

NOTES

DIMENSIONS IN MM (INCH)
DO NOT SCALE

TITLE

WIRING SCHEMATIC FOR
ABVW PANEL

BETA MARINE

TEL +44 (0)1452 723492 FAX +44 (0)1452 883742

BETA MARINE LTD.
DAVY WAY, WATERWELLS,
QUEDGELEY, GLOUCESTER
GL2 2AD UK

DRAWN BY:–	SIZE	DWG NO.	REV
TW	A4	100-06333	02
CHECKED BY:– DM	SCALE N/A	PAGE 1 of 1	DATE 03/12/04

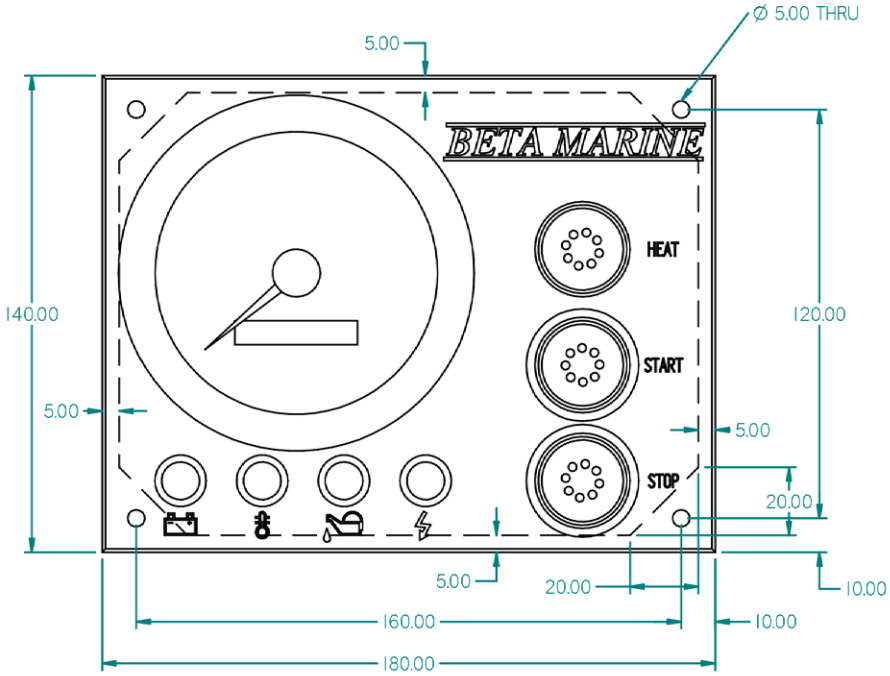

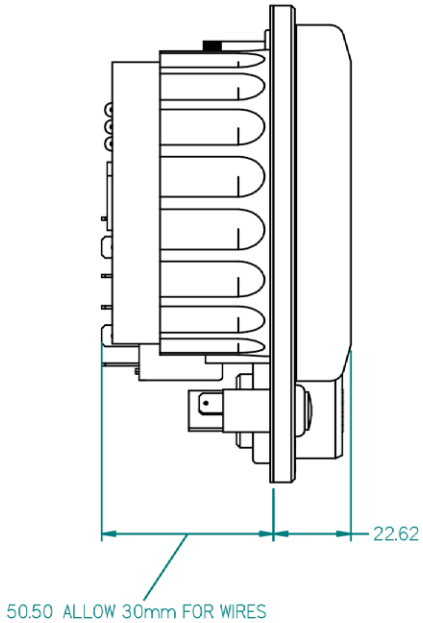

REV	DESCRIPTION	DATE	APP'D	DRAWN
01				

NOTES

DIMENSIONS IN MM (INCH) DO NOT SCALE

MATL:

TITLE

ABVW
WATERPROOF PANEL

BETA MARINE

TEL +44 (0)1452 723492 FAX +44 (0)1452 883742

BETA MARINE LTD.
DAVY WAY, WATERWELLS,
QUEDGELEY, GLOUCESTER
GL2 2AD UK

DRAWN BY:-	SIZE	DWG NO.	REV
TW	A4	200-06331	00
CHECKED BY:- LT	SCALE NTS	PAGE 2 of 2	DATE 19/03/2014

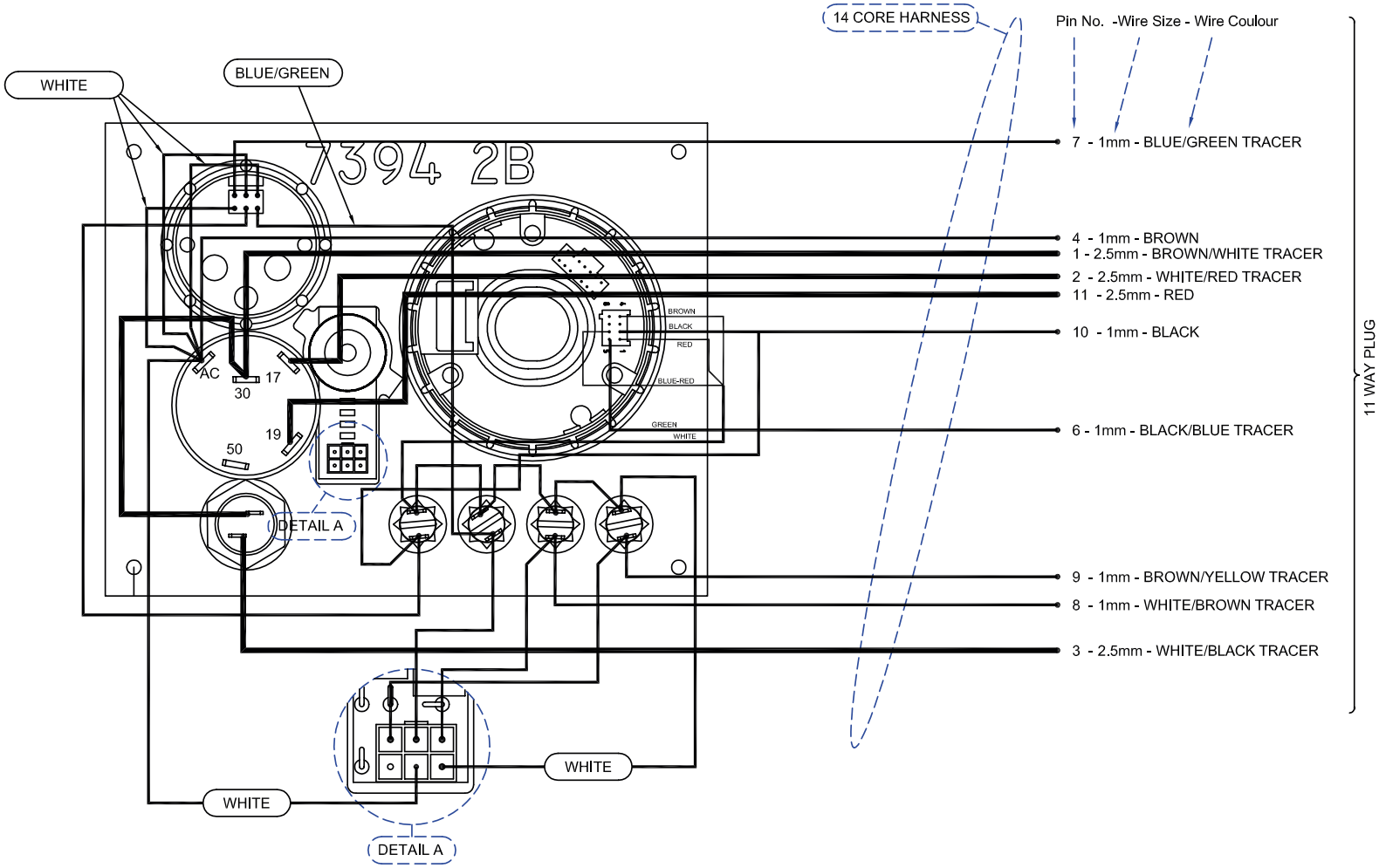

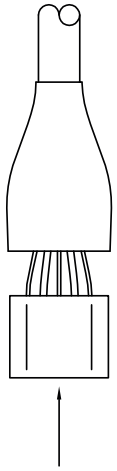

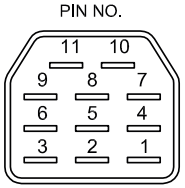

VIEW A

PIN 5 IS NOT USED IN THIS ARRANGEMENT.
THERE ARE SOME SPARE CORES UNUSED IN THE HARNESS.

REV	DESCRIPTION	DATE	APP'D	DRAWN
0.1	TACHO	22/04/11	DM	TW

NOTES

DIMENSIONS IN MM (INCH) DO NOT SCALE

TITLE

WIRING SCHEMATIC FOR
B PANEL
AFTER MAY 2011

BETA MARINE

TEL +44 (0)1452 723492 FAX +44 (0)1452 883742

BETA MARINE LTD.
DAVY WAY, WATERWELLS,
QUEDGELEY, GLOUCESTER
GL2 2AD UK

DRAWN BY:–	SIZE	DWG NO.	REV
TW	A4	200-06520	01
CHECKED BY:– DM	SCALE N/A	PAGE 1 of 1	DATE 16/05/05

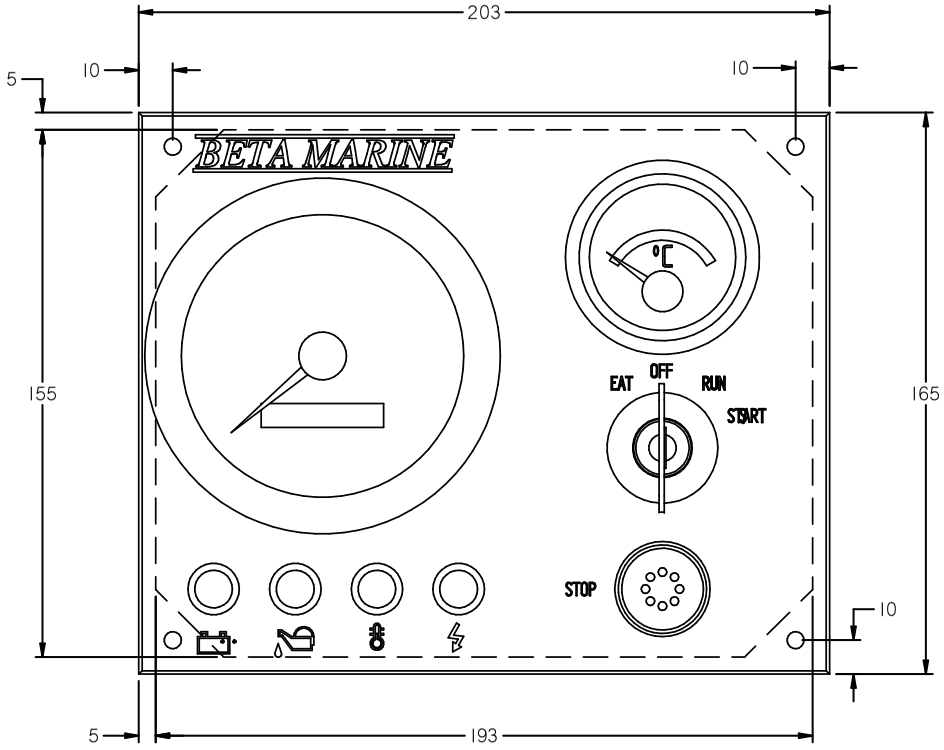

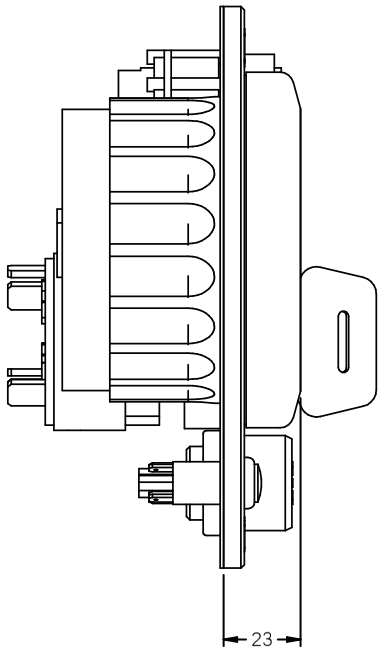

REV	DESCRIPTION	DATE	APP'D	DRAWN
01				

NOTES

DIMENSIONS IN MM (INCH) DO NOT SCALE

MATL:

TITLE: B PANEL

BETA MARINE

TEL: (01453) 835282 FAX: (01453) 835284

BETA MARINE LTD, MERRETTS MILLS, BATH ROAD, SOUTH WOODCHESTER, STROUD, GLOS. GL5 5EU

DRAWN BY:- jamest

CHECKED BY:- LT

SIZE A4 | DWG NO. 200-06303 | REV 02

SCALE NTS | PAGE 2 of 2 | DATE 01/03/2017

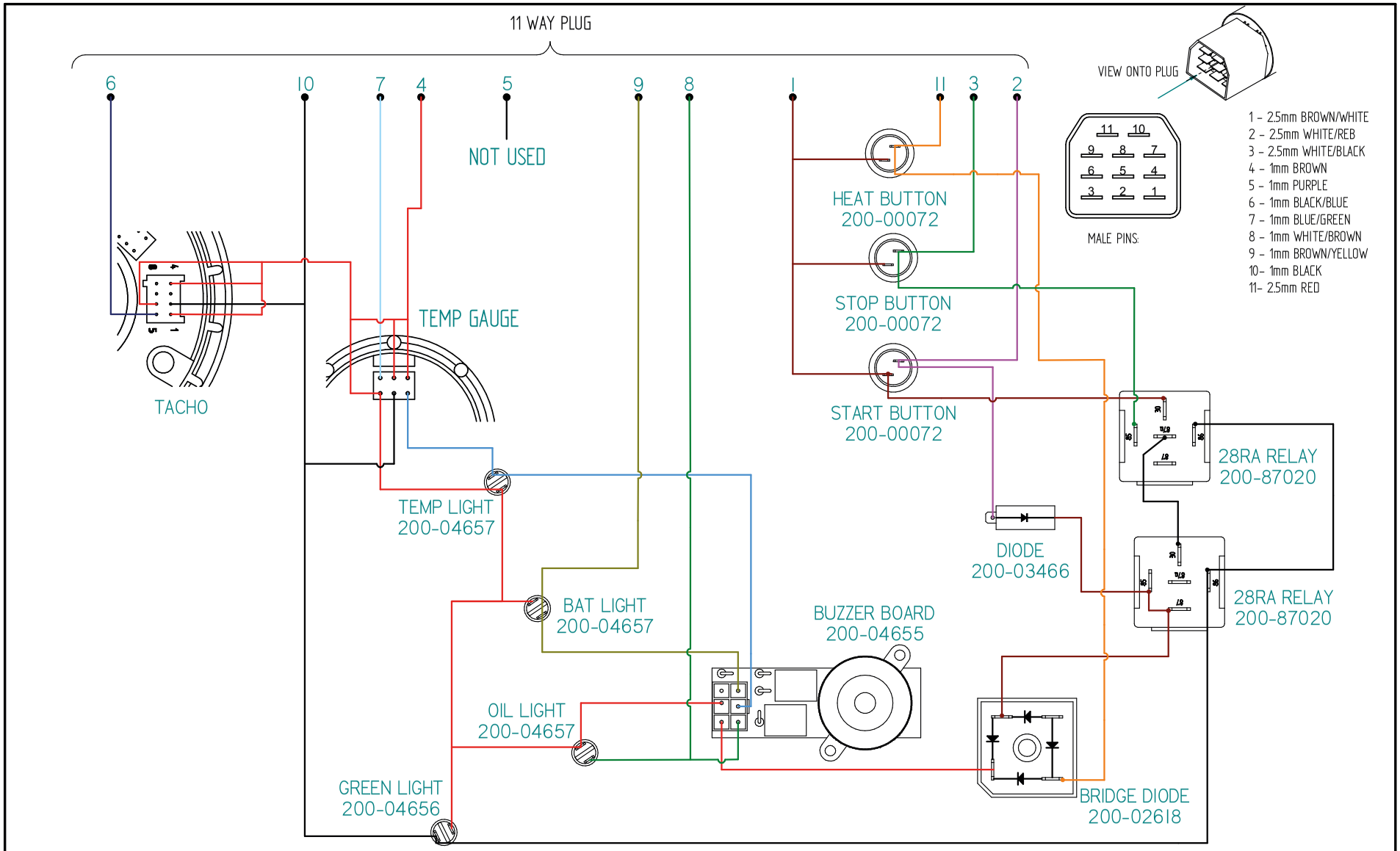

REV	DESCRIPTION	DATE	APP'D	DRAWN
01				

NOTES

TITLE: 2BW PANEL WIRING DRAWING

DIMENSIONS IN MM (INCH) DO NOT SCALE

PART FILE NAME: 200-06598 2CW DELUXE PANEL WATER RESISTANT.asm

BETA MARINE

TEL: (01452) 723492 FAX: (01452) 729916

BETA MARINE LTD, DAVY WAY, WATERWELLS, QUEDGELEY, GLOUCESTER. GL2 2AD, UK

DRAWN BY:	TW	SIZE	A3	DWG NO:	200-06417	REV	00
CHECKED BY:	LT	SCALE	NTS	PAGE	1 of 1	DATE	22/04/2016

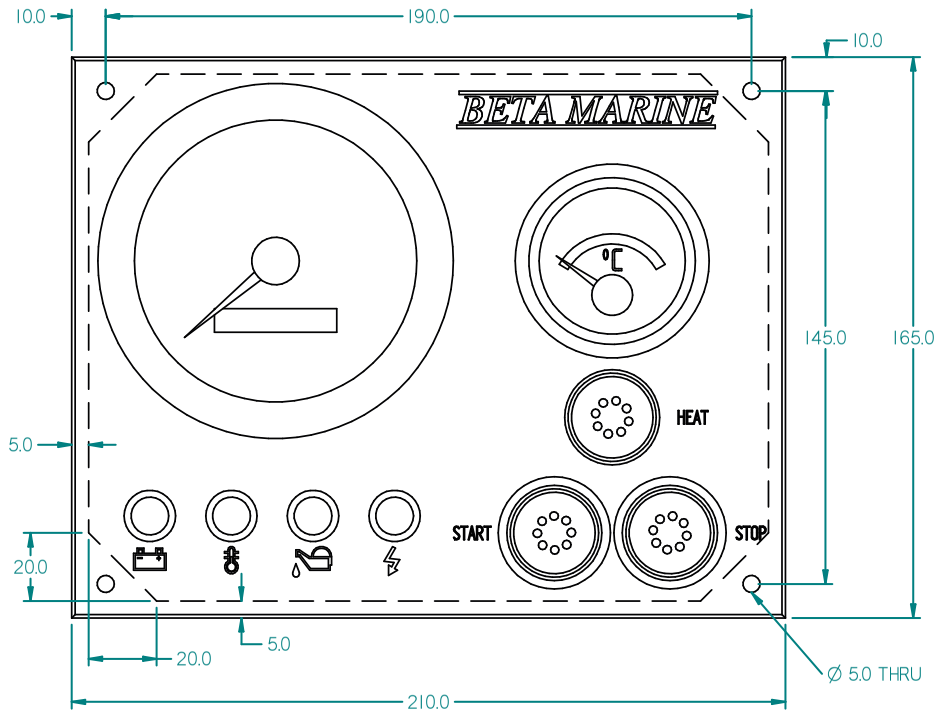

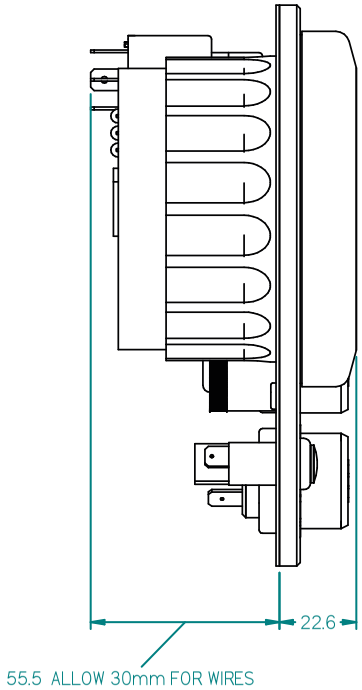

REV	DESCRIPTION	DATE	APP'D	DRAWN
01				

NOTES

TITLE: 2BW SPLASH PROOF PANEL

DIMENSIONS IN MM (INCH) DO NOT SCALE

PART FILE NAME: 200-06417 2BW WATER RESISTANT PANEL.asm

BETA MARINE

TEL: (01452) 723492 FAX: (01452) 729916

BETA MARINE LTD, DAVY WAY, WATERWELLS, QUEDGELEY, GLOUCESTER. GL2 2AD, UK

DRAWN BY:	SIZE	DWG NO:	REV
TW	A4	200-06417	00
CHECKED BY: LT	SCALE NTS	PAGE 2 of 2	DATE 19/03/2014

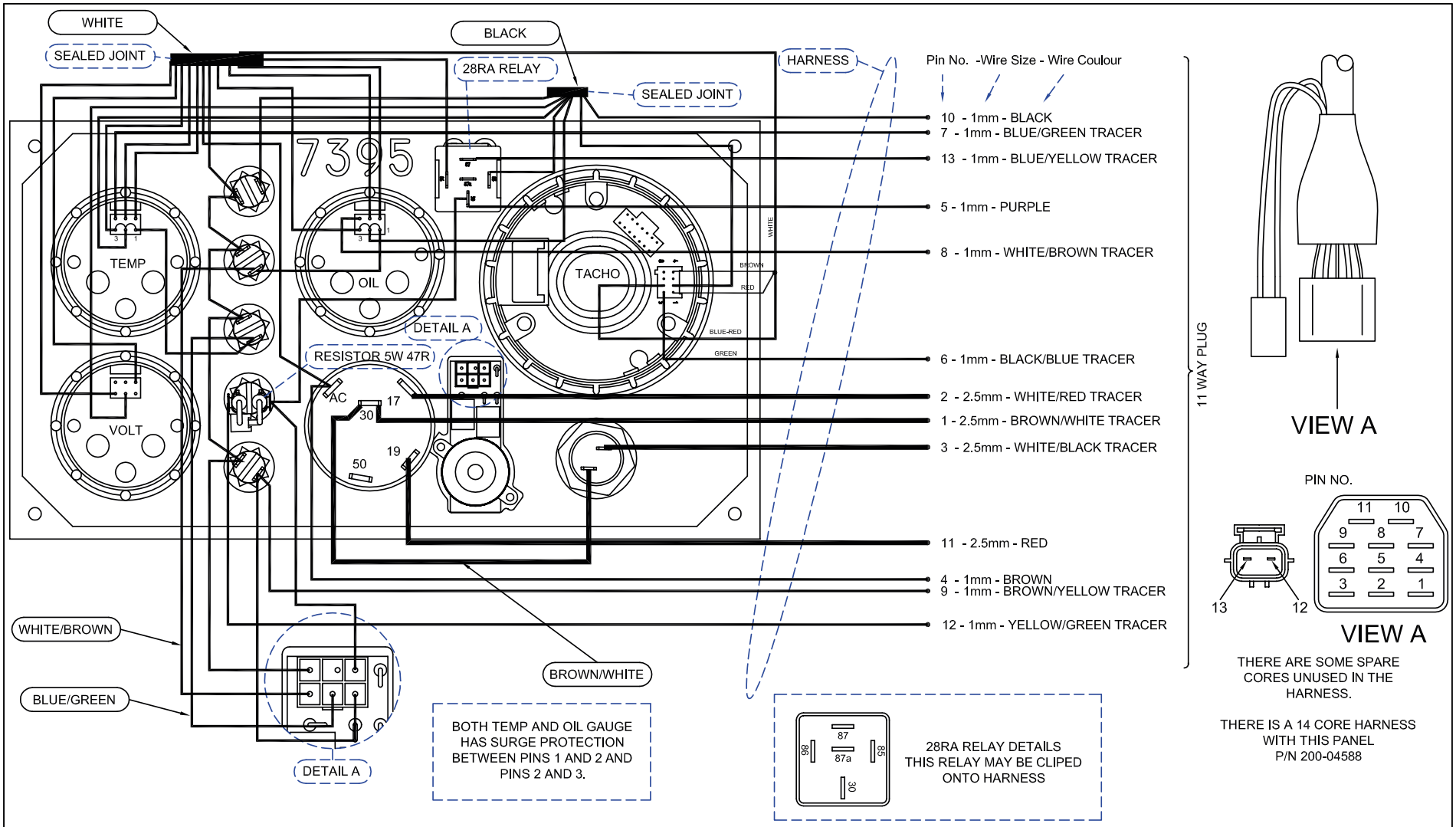

REV	DESCRIPTION	DATE	APP'D	DRAWN
01	CHANGED WHITE & BLACK AROUND	19/09/05	DM	TW
02	TACHO AND DOMESTIC WIRES	22/04/11	DM	TW

NOTES

FOR PART LIST AND PANEL SIZE SEE DRAWING 200-06306
PANEL PART NUMBER 200-05445
(THIS EXCLUDES GAUGES)

DIMENSIONS IN MM (INCH) DO NOT SCALE

TITLE

WIRING SCHEMATIC FOR
C PANEL (DELUXE)
AFTER MAY 2011

BETA MARINE

BETA MARINE LTD.
DAVY WAY, WATERWELLS,
QUEDGELEY, GLOUCESTER
GL2 2AD UK
TEL +44 (0)1452 723492 FAX +44 (0)1452 883742

DRAWN BY:–	SIZE	DWG NO.	REV
TW	A4	200-06518	02
CHECKED BY:– DM	SCALE N/A	PAGE 1 of 1	DATE 15/05/05

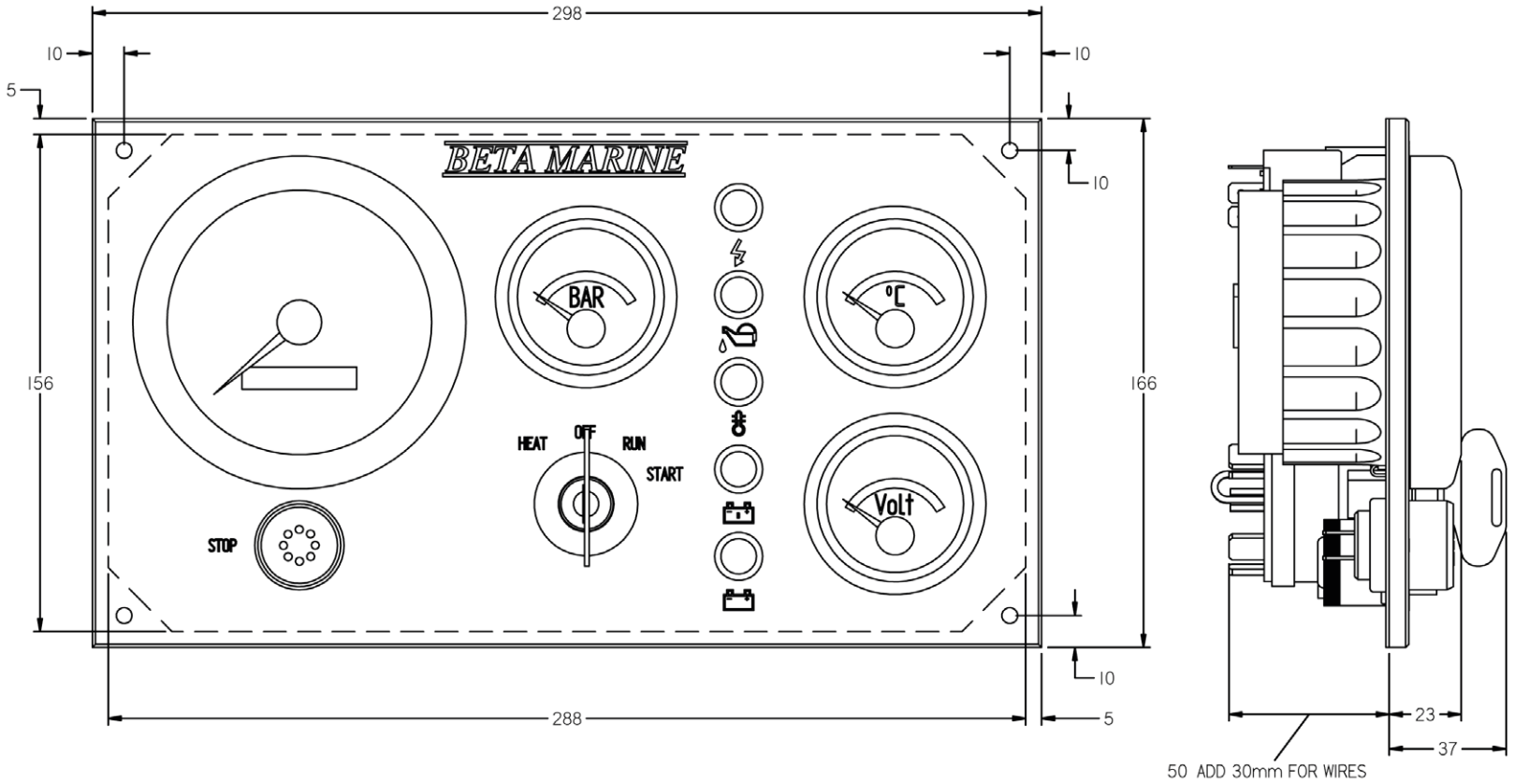

REV	DESCRIPTION	DATE	APP'D	DRAWN
01				

NOTES

TITLE: C PANEL

DIMENSIONS IN MM (INCH) DO NOT SCALE

MATL:

BETA MARINE

TEL +44 (0)1452 723492 FAX +44 (0)1452 883742

BETA MARINE LTD.
DAVY WAY, WATERWELLS,
QUEDGELEY, GLOUCESTER
GL2 2AD UK

DRAWN BY:- TW	SIZE A4	DWG NO. 200-06306		REV 01	
CHECKED BY:- LT	SCALE NTS	PAGE 2 of 2		DATE 12/08/2009	

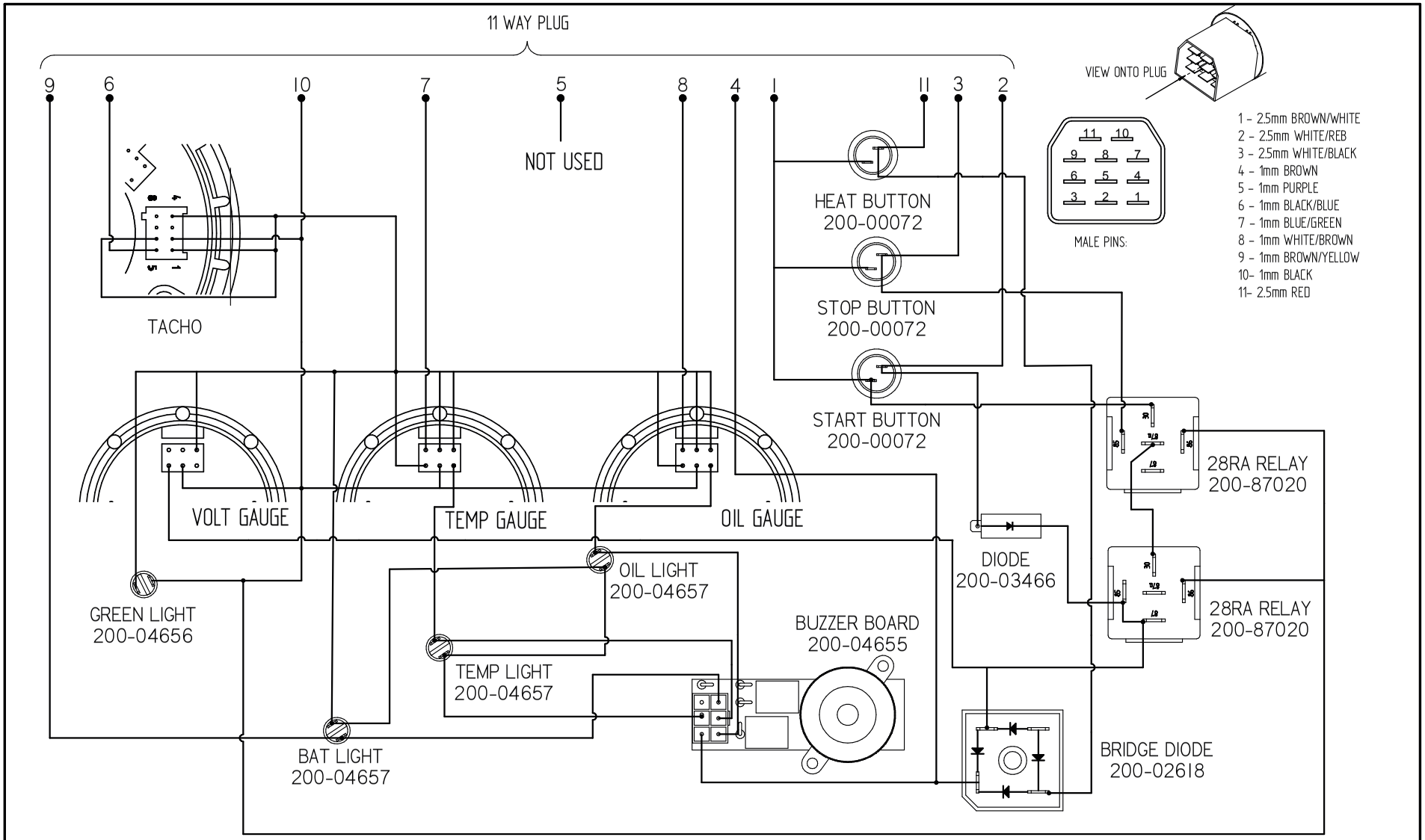

REV	DESCRIPTION	DATE	APP'D	DRAWN
01				
02	volt meter feed wire	22-01-16	DM	TW
03	BUZZER BOARD WIRING ON SHEET 1	02-02-16	DM	TW

NOTES

TITLE: 2CW PANEL DELUXE

DIMENSIONS IN MM (INCH) DO NOT SCALE

PART FILE NAME: 200-06598 2CW DELUXE PANEL WATER RESISTANT.asm

BETA MARINE

TEL: (01452) 723492 FAX: (01452) 729916

BETA MARINE LTD, DAVY WAY, WATERWELLS, QUEDGELEY, GLOUCESTER. GL2 2AD, UK

DRAWN BY: TW

CHECKED BY: LT

SIZE A3

DWG NO: 200-06598

REV 03

SCALE NTS

PAGE 1 of 2

DATE 01/10/2014

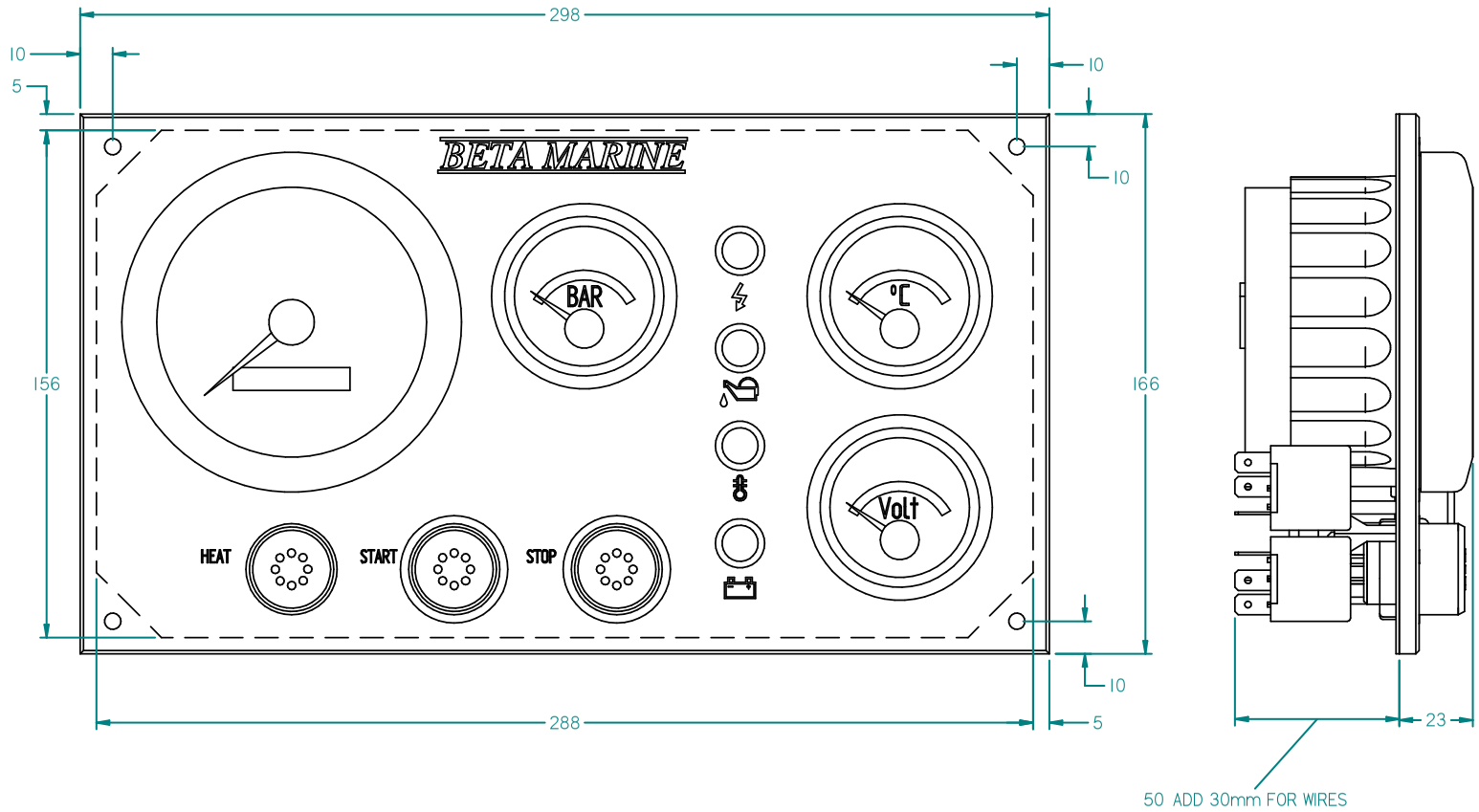

REV	DESCRIPTION	DATE	APP'D	DRAWN
01				

NOTES

TITLE: 2CW PANEL DELUXE

DIMENSIONS IN MM (INCH) DO NOT SCALE

PART FILE NAME: 200-06598 2CW DELUXE PANEL WATER RESISTANT.asm

BETA MARINE

TEL: (01452) 723492 FAX: (01452) 729916

BETA MARINE LTD, DAVY WAY, WATERWELLS, QUEDGELEY, GLOUCESTER. GL2 2AD, UK

DRAWN BY:	TW	SIZE	A4	DWG NO:	200-06598	REV	03
CHECKED BY:	LT	SCALE	NTS	PAGE	2 of 2	DATE	19/03/2014

BETA MARINE

QA F 008B
DECLARATION OF CONFORMITY
REVISION 02
DATE MARCH 2018

Beta Marine Limited
Davy Way
Waterwells
Quedgeley
Gloucester, GL2 2AD
United Kingdom
Tel: +44 (0)1452 723492
Fax: +44 (0)1452 883742
Email: sales@betamarine.co.uk
www.betamarine.co.uk

EU DECLARATION OF CONFORMITY

Object of the Declaration

Product	Beta Marine Propulsion Engines.
Models types	Beta 10, Beta 14, Beta 16, Beta 20 and Beta 25.
Manufacturer	Beta Marine Limited.
Address	Davy Way, Waterwells, Quedgeley, Gloucester, GL2 2AD, United Kingdom.

This declaration is issued under the responsibility of the manufacturer.

The object of the declaration above is in conformity with the relevant Union harmonised legislation:

2013/53/EU	Recreational craft and personal watercraft.

Conformity is shown by compliance with the applicable requirements of the following documents:

40CFR-1042	US Clean Air Act, Section 213.
ISO 8178-4	Test cycles.
ISO 3046-4	Reciprocating Internal Combustion Engines, performance.
ISO 8665	Declaration of Power, rating of marine propulsion engines.
ISO 9001	Beta Marine Ltd Company Quality Manual.

Type examination certification by DNV-GL, Notified Body No: 0098.

Accordingly, the engine(s) is (are) CE marked in respect to this certification as required by 2013/53/EU.

Signed, for and on behalf of:	Beta Marine Limited
Place of issue:	Gloucester
Date of issue:	March 2018
Name:	J. A. Growcoot
Position:	C.E.O.
Signature:	

JAGrowcoot

Dated: 1st March 2018.

BETA MARINE

QA F 008B
DECLARATION OF CONFORMITY
REVISION 03
DATE JUNE 2020

Beta Marine Limited
Davy Way
Waterwells
Quedgeley
Gloucester, GL2 2AD
United Kingdom
Tel: +44 (0)1452 723492
Fax: +44 (0)1452 883742
Email: sales@betamarine.co.uk
www.betamarine.co.uk

EU DECLARATION OF CONFORMITY

The Beta range of marine propulsion engines.

This declaration is applicable to the following model types:

Beta 30, Beta 35, Beta 38, Beta 43, Beta 45T, Beta 50, Beta 60,
Beta 70T, Beta 75, Beta 85T, Beta 90T and Beta 105T.

Manufactured by Beta Marine Limited at the address given above.

This declaration of conformity is issued under the sole responsibility of the manufacturer.

The object of this declaration is to confirm compliance of the propulsion engine in accordance with the exhaust emission requirements of directive 2013/53/EU in conformity with the relevant Union harmonised legislation.

Standards used include in part as applicable ISO 8178, ISO 8665, ISO 18854, ISO 3046 except where engines are pre-approved in accordance with Stage III of Directive 97/68/EC.

When installed in a watercraft, in accordance with the installation instructions accompanying the engine, the engine will meet:

(i) The exhaust emission requirements of this Directive,

(ii) The limits of Directive 97/68/EC as regards engines type-approved in accordance with Directive 97/68/EC which are in compliance with stage IIIA, stage IIIB or stage IV emission limits for CI engines used in other application than propulsion of inland waterways vessels, locomotives and railcars, as provided for in point 4.1.2 of Annex 1 of that Directive.

The person empowered to sign on behalf of Beta Marine Limited is Mr J. A. Growcoot who is the Chief Executive Officer of the company.

Individual certificates applicable to any particular engine serial number will be issued on request in any requested EU approved European language applicable to the country in which the installation is made.

Signed for and on behalf of Beta Marine Limited.

JAGrowcoot

Dated: 15th June 2020.

Emission Durability

IN RESPECT TO THE RECREATIONAL CRAFT DIRECTIVE 2013/53/EU AND IN PARTICULAR RESPECT TO EXHAUST EMISSIONS.

The engine must be installed, maintained and operated within the parameters detailed in the Operator's Maintenance Manual. Maintenance must use approved materials, parts and consumables. Should the engine lie unused for a period in excess of 6 months it must be inhibited otherwise it will deteriorate with resulting decrease in performance. See also the Winterising and Laying Up procedures in the Operator's Maintenance Manual.

The fuel settings of the diesel injection system must not be tampered with otherwise the guarantee will be invalid and the performance may fall outside prescribed limit. Such adjustment cannot be allowed under the terms of the emission certification.

Performance of the engine depends upon the use of correct fuels, lubricants and inhibitors. These are fully detailed in the Operator's Maintenance Manual.

Particular attention must be paid to the installation with respect to the exhaust system. The system must be designed so that water cannot back feed into the engine. The run must be such that the back pressure at the engine manifold does not exceed the limit detailed in the Operator's Maintenance Manual. Wet (water injected) exhaust systems must be at least the bore mentioned in the Operator's Maintenance Manual and should the run be excessive this bore must be increased accordingly. Back pressure is measured at the outlet of the engine manifold before the water injection bend or dry bellows.

Our experience has proven that properly installed and maintained engines hold their performance without major mishap even when running hours exceed those mentioned in the Recreational Craft Directive. It is the owners / users responsibility to ensure that the engine continues to function properly and any malfunction must be immediately investigated. The Trouble Shooting section as detailed in the Operator's Maintenance Manual is particularly helpful in this respect.

Engine performance, especially with respect to erratic running, exhaust condition, low power output and high oil consumption are indications of engine conditions that may result in emissions outside the prescribed limits and must therefore be investigated and rectified immediately. Only genuine Beta Marine or Kubota approved parts must be used.

This document is to be read in conjunction with our "Enhanced Kubota Based Engine Warranty" ref: **WC 221-10231**.

2013/53/EU and minor text corrections, September 12, 2016.

Cross ref to Warranty Card, October 3, 2017.

Emission-Related Warranty - EPA

FEDERAL & CALIFORNIA EMMISSION CONTROL SYSTEMS LIMITED WARRANTY FOR CATEGORY 1 NON-ROAD ENGINES

The U.S. Environmental Protection Agency (EPA), the California Air Resources Board (CARB), and BETA MARINE are pleased to explain the Federal and California Emission Control System Warranty on your non-road engine. In California, off-road engines must be designed, built and equipped to meet California's stringent anti-smog standards adopted by the Air Resources Board pursuant to its authority in Chapter 1 and 2, Part 5, Division 26 of the California Health and Safety Code. In other states of the U.S.A., new non-road · engines subject to the provisions of 40 CFR 1039 subpart A must be designed, built and equipped, at the time of sale, to meet the U.S. EPA regulations for nonroad engines.

BETA MARINE must warrant the emission control system on your Compression Ignition engine for the period of time listed below provided there has been no abuse, vandalism, neglect, improper maintenance or unapproved modifications to your engine. This emission warranty is applicable in all states of the U.S.A., its provinces and territories regardless of whether an individual state, province, or territory has enacted warranty provisions that differ from the Federal warranty provisions.

Your emission control system may include parts such as the fuel injection system and the air induction system. Also included may be hoses, belts, connectors and other emission-related assemblies.

Where a warrantable condition exists, BETA MARINE will repair your engine at no cost to you, including diagnosis (if the diagnostic work is performed at an authorized dealer), parts and labour.

EMISSION DESIGN AND DEFECT WARRANTY COVERAGE

The emissions warranty period for the engine begins on the original date of sale to the initial purchaser and continues for each subsequent purchaser for the period mentioned below.

The emissions warranty period for recreational engines is 500 hours of operation or five (5) years of use, whichever first occurs.

The emissions warranty period for commercial engines rated below 19kW (25Hp) is 1500 hours of operation or two and a half (2.5) years of use, whichever first occurs.

The emissions warranty period for commercial engines rated from 19kW (25Hp) and below 37kW

(50Hp) is 2500 hours of operation or three and a half (3.5) years of use, whichever first occurs.

The emissions warranty period for commercial engines at or above 37kW (50Hp) is 5000 hours of operation or five (5) years of use, whichever first occurs.

If any emission related part on your engine is defective within the above relevant warranty period, the part will be repaired or replaced by BETA MARINE free of charge.

OWNER'S WARRANTY RESPONSIBILITIES

(a) As the engine owner, you are responsible for the performance of the required maintenance listed in your BETA MARINE operator's manual. BETA MARINE recommends that you retain all receipts covering maintenance on your engine, but BETA MARINE cannot deny a warranty claim solely for the lack of receipts or for your failure to ensure the performance of all scheduled maintenance.

(b) As the engine owner, you should be aware, however, that BETA MARINE may deny your warranty coverage if your engine or a part has failed due to abuse, vandalism, neglect, improper maintenance or unapproved modifications.

(c) Your engine is designed to operate on Ultra Low Sulphur Diesel Fuel only. Use of any other fuel may result in your engine no longer operating in compliance with Federal or California's emissions requirements.

(d) You are responsible for presenting your engine with proof of purchase to the nearest dealer or service station authorized by BETA MARINE when a problem exists. The warranty repairs should be completed in a reasonable amount of time, not to exceed 30 days.

(e) If you have any questions regarding your warranty rights and responsibilities or the location of the nearest authorized dealer or distributor, you should contact:

BETA MARINE US LTD.
PO Box 5, 11702 Highway 306 S,
Minnesott Beach, NC 28510. USA

Tel: (252) 249-2473
Email: info@betamarinenc.com
Website: www.betamarinenc.com

COVERAGE

BETA MARINE warrants to the initial purchaser and each subsequent purchaser that your engine will be designed, built and equipped, at the time of sale, to meet all applicable regulations. BETA MARINE also warrants to the initial purchaser and each subsequent purchaser that your engine shall be free from defects in materials and workmanship which cause the engine to fail to conform to applicable regulations for the period mentioned above from the original date of sale.

BETA MARINE shall remedy warranty defects at any authorized BETA MARINE engine dealer or warranty station. Any authorized work done at an authorized dealer or warranty station shall be free of charge to the owner if such work determines that a warranted part is defective. Any BETA MARINE approved or equivalent replacement part (including any BETA MARINE approved aftermarket part) may be used for any warranty maintenance or repairs on emission related parts and must be provided free of charge to the owner if the part is still under warranty.

BETA MARINE is liable for damages to other engine components caused by the failure of a warranted part still under warranty. The use of replacement parts not equivalent to the original parts may impair the effectiveness of your engine emission control system. If such a replacement part is used in the repair or maintenance of your engine, and BETA MARINE determines it is defective or causes a failure of a warranted part, your claim for repair of your engine may be denied.

Listed below are the parts covered by the Federal and California Emission Control Systems Warranty. Some parts listed below may require scheduled maintenance and are warranted up to the first scheduled replacement point for that part. The warranted parts are (if applicable):

1) Air-Induction System
   a) Intake Manifold
   b) Turbocharger System
2) Exhaust Manifold
3) Fuel Injection System
   a) Fuel Supply Pump
   b) Injector
   c) Injection Pipe
   d) Injector Pump
4) Exhaust Gas Recirculation System
   a) EGR Valve
   b) EGR Cooler
   c) EGR Valve Opening Rate Sensor
5) Miscellaneous Items
   a) Closed Breather System
   b) Hoses*, Clamps*, Fittings, Tubing*
   c) Gaskets, Seals
   d) Air Cleaner Element*, Fuel Filter Element*
   e) Emission Control Information Label

*Warranty period is equivalent to manufacturer's recommended first replacement interval as stated in the applicable model's operator's manual and/or service (workshop) manual.

MAINTENANCE REQUIREMENTS

The owner is responsible for the performance of the required maintenance as defined by BETA MARINE in the operator's manual.

LIMITATIONS

This Emission Control System Warranty shall not cover any of the following:

(a) Repair or replacement required because of misuse or neglect, improper maintenance, repairs improperly performed or replacements not conforming to BETA MARINE specifications that adversely affect performance and/or durability, and alteration or modifications not recommended or approved in writing by BETA MARINE.

(b) Replacement of parts and other services and adjustments necessary for required maintenance at and after the first scheduled replacement point.

Important!

Beta Marine Ltd operates a policy of continuous improvement and reserves the right to change prices & specification without prior notification. Information given is subject to our current conditions of tender & sale.

All products with moving parts can be dangerous if used improperly;

Always Read Instructions For Use, Carefully.

Product and performance can vary from market to market, ask your dealer or Beta Marine about available product, performance and accessories in your market.

All technical data within this manual was correct at the time of printing, but such data is subject to change due to ongoing product development.

To view and download pdf files of the latest relevant documents visit: **www.betamarine.co.uk**

Hazardous Materials

Used engine oils - may contain hazardous components which may have the potential to cause skin cancer. In the case of contact, immediately rinse skin with plenty of water for several minutes and then wash contact area with soap and water. Keep out of reach of children.

The rules & regulations for the disposal of waste oil and or antifreeze solutions in the UK varies by location and whether you are a business or a private individual.

To find your nearest disposal bank or learn more visit: **www.oilcare.org.uk**

For the safe and legal way to dispose of hazardous materials outside the UK, carefully check and comply with the legal requirements in your country.

Notes...

Section 7: Consumable Service Parts

Engine Model	Beta 10 ☐
Fuel Filter	211-60210
Lube Oil Filter - Engine Fitted	211-63760
Lube Oil Filter - Remote Bulkhead Mounted Option	211-70510/02
Air Filter	211-08132
Sacrificial Anode	209-61840
Heat Exchanger O-Rings	2 x 212-07273
Seawater Pump Impellor Kit - Including O-Ring	207-09041-KIT
40 Amp Starter Battery Alternator PolyVee Drive Belt	212-05074
70 Amp Starter Battery Alternator PolyVee Drive Belt	✗
75 Amp Starter Battery Alternator PolyVee Drive Belt	212-05074
120 Amp Starter Battery Alternator PolyVee Drive Belt	214-04124
55 Amp Insulated Return Starter Battery Alternator PolyVee Drive Belt	212-05074
70 Amp Insulated Return Starter Battery Alternator PolyVee Drive Belt	✗
120 Amp 2nd Domestic Battery Alternator PolyVee Drive Belt	✗
3.5 kVA Travel Power Belt	✗

Engine Model	Beta 25 ☐
Fuel Filter	211-60210
Lube Oil Filter - Engine Fitted	211-63760
Lube Oil Filter - Remote Bulkhead Mounted Option	211-70510/02
Air Filter	211-08132
Sacrificial Anode	209-61840
Heat Exchanger O-Rings	2 x 212-07273
Seawater Pump Impellor Kit - Including O-Ring	207-09041-KIT
40 Amp Starter Battery Alternator PolyVee Drive Belt	212-05074
70 Amp Starter Battery Alternator PolyVee Drive Belt	✗
75 Amp Starter Battery Alternator PolyVee Drive Belt	212-05074
120 Amp Starter Battery Alternator PolyVee Drive Belt	214-04124
55 Amp Insulated Return Starter Battery Alternator PolyVee Drive Belt	212-05074
70 Amp Insulated Return Starter Battery Alternator PolyVee Drive Belt	✗
120 Amp 2nd Domestic Battery Alternator PolyVee Drive Belt	✗
3.5 kVA Travel Power Belt	✗

Engine Model	Beta 45T ☐
Fuel Filter	211-60210
Lube Oil Filter - Engine Fitted	211-60390
Lube Oil Filter - Remote Bulkhead Mounted Option	211-70510/02
Air Filter	211-09179
Sacrificial Anode	209-61840
Heat Exchanger O-Rings	2 x 212-07273
Seawater Pump Impellor Kit - Including O-Ring	207-09041-KIT
40 Amp Starter Battery Alternator PolyVee Drive Belt	✗
70 Amp Starter Battery Alternator PolyVee Drive Belt	214-04618
75 Amp Starter Battery Alternator PolyVee Drive Belt	✗
120 Amp Starter Battery Alternator PolyVee Drive Belt	214-04618
55 Amp Insulated Return Starter Battery Alternator PolyVee Drive Belt	✗
70 Amp Insulated Return Starter Battery Alternator PolyVee Drive Belt	214-04618
120 Amp 2nd Domestic Battery Alternator PolyVee Drive Belt	**PNA***
3.5 kVA Travel Power Belt	**PNA***

Beta 14 ☐	Beta 16 ☐	Beta 20 ☐
211-60210	211-60210	211-60210
211-63760	211-63760	211-63760
211-70510/02	211-70510/02	211-70510/02
211-08132	211-08132	211-08132
209-61840	209-61840	209-61840
2 x 212-07273	2 x 212-07273	2 x 212-07273
207-09041-KIT	207-09041-KIT	207-09041-KIT
212-05074	212-05074	212-05074
✗	✗	✗
212-05074	212-05074	212-05074
214-04124	214-04124	214-04124
212-05074	212-05074	212-05074
✗	✗	✗
✗	✗	✗
✗	✗	✗

Beta 30 ☐	Beta 35 ☐	Beta 38 ☐
211-60210	211-60210	211-60210
211-60390	211-60390	211-60390
211-70510/02	211-70510/02	211-70510/02
211-08132**	211-08132	211-08132
209-61840	209-61840	209-61840
2 x 212-07273	2 x 212-07273	2 x 212-07273
207-09041-KIT	207-09041-KIT	207-09041-KIT
✗	✗	✗
214-04618	214-04618	214-04618
✗	✗	✗
214-04618	214-04618	214-04618
✗	✗	✗
214-04618	214-04618	214-04618
PNA*	**PNA***	**PNA***
PNA*	**PNA***	**PNA***

✗ - Not Applicable.

***PNA** - Part No On Application Due To Variance, K WOC Number or Engine Serial No Required. Once Known Please Populate PN In Available Space For Future Reference.

**This Part Number is for Beta 30 equipped with a mechanical gearbox only. For a Beta 30 equipped with a hydraulic gearbox please use Part Number 211-08133.

Section 7: Consumable Service Parts

Engine Model	Beta 43 ☐
Fuel Filter	211-60210
Lube Oil Filter - Engine Fitted	211-70510/02
Lube Oil Filter - Remote Bulkhead Mounted Option	211-70510/02
Air Filter	211-09179
Sacrificial Anode	209-61840
Heat Exchanger O-Rings	2 x 212-07273
Seawater Pump Impellor Kit - Including O-Ring	207-09042-KIT
70 Amp 12v Starter Battery Alternator V Drive Belt	214-80750
70 Amp 12v Starter Battery Alternator PolyVee Drive Belt	214-92105
120 Amp 12v Starter Battery Alternator PolyVee Drive Belt	214-92105
175 Amp 12v Starter Battery Alternator PolyVee Drive Belt	214-04776
70 Amp 12v Insulated Return Starter Battery Alternator V Drive Belt	214-80750
70 Amp 12v Insulated Return Starter Battery Alternator PolyVee Drive Belt	214-92105
100 Amp 12v Insulated Return Starter Battery Alternator PolyVee Drive Belt	214-92105
100 Amp 12v 2nd Domestic Battery Alternator PolyVee Drive Belt	**PNA***
175 Amp 12v 2nd Domestic Battery Alternator PolyVee Drive Belt	**PNA***
55 Amp 24v Starter Battery Alternator PolyVee Drive Belt	214-92105
80 Amp 24v 2nd Domestic Battery Alternator PolyVee Drive Belt	**PNA***
60 Amp 24v Insulated Return 2nd Domestic Battery Alternator PolyVee Drive Belt	**PNA***
3.5 kVA Travel Power Belt	**PNA***
5.0 kVA Travel Power Belt	**PNA***

Engine Model	Beta 75 ☐
Fuel Filter	211-60210
Lube Oil Filter - Engine Fitted	211-70510/02
Lube Oil Filter - Remote Bulkhead Mounted Option	211-70510/02
Air Filter	211-03819
Sacrificial Anode	209-61840
Heat Exchanger O-Rings	2 x 209-00814
Seawater Pump Impellor Kit - Including O-Ring	207-10709
70 Amp 12v Starter Battery Alternator V Drive Belt	214-94260
70 Amp 12v Starter Battery Alternator PolyVee Drive Belt	214-04776
120 Amp 12v Starter Battery Alternator PolyVee Drive Belt	214-02614
175 Amp 12v Starter Battery Alternator PolyVee Drive Belt	214-02614
70 Amp 12v Insulated Return Starter Battery Alternator V Drive Belt	214-99225
70 Amp 12v Insulated Return Starter Battery Alternator PolyVee Drive Belt	214-02614
100 Amp 12v Insulated Return Starter Battery Alternator PolyVee Drive Belt	214-02614
100 Amp 12v 2nd Domestic Battery Alternator PolyVee Drive Belt	**PNA***
175 Amp 12v 2nd Domestic Battery Alternator PolyVee Drive Belt	**PNA***
55 Amp 24v Starter Battery Alternator PolyVee Drive Belt	214-02614
80 Amp 24v 2nd Domestic Battery Alternator PolyVee Drive Belt	**PNA***
60 Amp 24v Insulated Return 2nd Domestic Battery Alternator PolyVee Drive Belt	**PNA***
3.5 kVA Travel Power Belt	**PNA***
5.0 kVA Travel Power Belt	**PNA***

Beta 50 ☐	Beta 60 ☐	Beta 70T ☐
211-60210	211-60210	211-02817
211-70510/02	211-70510/02	211-70510/02
211-70510/02	211-70510/02	211-70510/02
211-09179	211-09179	211-08134
209-61840	209-61840	209-61840
2 x 212-07273	2 x 212-07273	2 x 209-00814
207-09042-KIT	207-09042-KIT	207-10709
214-80750	214-80750	**PNA***
214-92105	214-92105	**PNA***
214-92105	214-92105	**PNA***
214-04776	214-04776	**PNA***
214-80750	214-80750	**PNA***
214-92105	214-92105	**PNA***
214-92105	214-92105	**PNA***
PNA*	**PNA***	**PNA***
PNA*	**PNA***	**PNA***
214-92105	214-92105	**PNA***
PNA*	**PNA***	**PNA***
PNA*	**PNA***	**PNA***
PNA*	**PNA***	**PNA***
PNA*	**PNA***	**PNA***

Beta 85T ☐	Beta 90 ☐	Beta 90T ☐
211-02817	211-02817	211-02817
211-70510/02	211-70510/02	211-70510/02
211-70510/02	211-70510/02	211-70510/02
211-08134	211-03819	211-08037/E
209-61840	209-61840	209-61840
2 x 209-00814	2 x 209-00814	209-21737
207-10709	207-10709	207-10709
600-10641	214-94260	**PNA***
PNA*	214-02614	**PNA***
PNA*	214-02614	**PNA***
PNA*	214-02614	**PNA***
PNA*	214-99225	**PNA***
PNA*	214-02614	**PNA***
PNA*	214-02614	**PNA***
PNA*	**PNA***	**PNA***
PNA*	**PNA***	**PNA***
PNA*	214-02614	**PNA***
PNA*	**PNA***	**PNA***
PNA*	**PNA***	**PNA***
PNA*	**PNA***	**PNA***
PNA*	**PNA***	**PNA***

***PNA** - Part No On Application Due To Variance, K WOC Number or Engine Serial No Required. Once Known Please Populate PN In Available Space For Future Reference.

Engine Model	Beta 105T ☐
Fuel Filter	211-02817
Lube Oil Filter - Engine Fitted	211-70510/02
Lube Oil Filter - Remote Bulkhead Mounted Option	211-70510/02
Air Filter	211-08037/E
Sacrificial Anode	209-61840
Heat Exchanger O-Rings	209-21737
Seawater Pump Impellor Kit - Including O-Ring	207-10709
70 Amp 12v Starter Battery Alternator V Drive Belt	**PNA***
70 Amp 12v Starter Battery Alternator PolyVee Drive Belt	**PNA***
120 Amp 12v Starter Battery Alternator PolyVee Drive Belt	**PNA***
175 Amp 12v Starter Battery Alternator PolyVee Drive Belt	**PNA***
70 Amp 12v Insulated Return Starter Battery Alternator V Drive Belt	**PNA***
70 Amp 12v Insulated Return Starter Battery Alternator PolyVee Drive Belt	**PNA***
100 Amp 12v Insulated Return Starter Battery Alternator PolyVee Drive Belt	**PNA***
100 Amp 12v 2nd Domestic Battery Alternator PolyVee Drive Belt	**PNA***
175 Amp 12v 2nd Domestic Battery Alternator PolyVee Drive Belt	**PNA***
55 Amp 24v Starter Battery Alternator PolyVee Drive Belt	**PNA***
80 Amp 24v 2nd Domestic Battery Alternator PolyVee Drive Belt	**PNA***
60 Amp 24v Insulated Return 2nd Domestic Battery Alternator PolyVee Drive Belt	**PNA***
3.5 kVA Travel Power Belt	**PNA***
5.0 kVA Travel Power Belt	**PNA***

	Beta 115T ☐
	211-02817
	211-70510/02
	211-70510/02
	211-08037/E
	209-61840
	209-21737
	207-10709
PNA*	
PNA*	
PNA*	
PNA*	
PNA*	
PNA*	
PNA*	
PNA*	
PNA*	
PNA*	
PNA*	
PNA*	
PNA*	
PNA*	

***PNA** - Part No On Application Due To Variance, K WOC Number or Engine Serial No Required. Once Known Please Populate PN In Available Space For Future Reference.

Section 8: Service Record

	Service	Date	Responsible	
1	Commissioned			
2	First 25 hours			
3	First 50 hours			
4	Every 150 hours with shallow sump			
5	Every Year/Every 250 hours if sooner			
6				
7				
8				
9	Every Year/Every 750 hours if sooner			
10				
11				
12				
13				
14				
15				
16				

	Service	Date	Responsible	
17				
18				
19				
20				
21				
22				
23				
24				
25				
26				
27				
28				
29				
30				
31				
32				

BETA MARINE

Beta Marine Limited, Davy Way, Waterwells, Quedgeley, Gloucester, GL2 2AD. UK.
Tel: +44 (0)1452 723492 Fax: +44 (0)1452 883742 Email: sales@betamarine.co.uk Website: www.betamarine.co.uk

Ref: OM 221-20031 REV 18 - 0620